KC/3

Blade Consistency Transmitter

KC/3
Blade Consistency Transmitter

Edition 2.2.1 · 2018-06-13
Original instructions

Specifications are subject to change without prior notice. ABB reserves the right to make improvements and/or changes in the product(s) and/or program(s) described in this document at any time. Changes are periodically made to the information and will be incorporated in new editions of this document. All efforts have been made to ensure the accuracy of this document. However, should any errors be detected, ABB would gratefully appreciate being informed of them. In case of errors in this document, ABB shall not be liable for incidental or consequential damages in connection with or arising from such errors. Copyright © 2018 by ABB inc.

SAFETY INFORMATION

All personell must have the necessary knowledge and training for the work, to minimize risk of injury and damage. All adjustments, settings, calibration routines and service work must be done only by specially trained personnel. It is the responsibility of the supervisor to ensure that this is the case.

All covers must be in place during normal operation. Most of the instruments have moving parts that are operated pneumatically and/or electrically, and some incorporate sharp edges that are capable of causing serious injury. A large part of the service work needs to be done with the compressed air supply connected.

Always read the instructions carefully before operating the equipment. The following notations are used to emphasize important and critical instructions:

NOTE
This label is used for instructions that are important but not related to hazards.

WARNING
This label is used to indicate potential risk of severe injury or damage if warning is ignored.

This manual W41080061 V1.85 is applicable for KC/3 firmware V1.36 or higher (KC/3 transmitters delivered since Nov 2009).

Changes version V1.3 to V1.4: Position adjustment possible to do at normal process consistency process running. Hart compatible.

- chapter 4.3. - chapter 4.4.10. - chapter 5.2. - appendix 1

Changes version V1.4 to V1.5: Password added to set-up menu, Connector Board layout change, new model selection table , new spare parts kit, new weight-consistency matrix:

- chapter 3. - chapter 6.1 - appendix 3 - appendix 5 - appendix 6

Changes version V1.5 to V1.6: New installation drawings appendix 2
Changes version V1.6 to V1.7: Revised wiring drawing Fig. 3.1
Changes version V1.7 to V1.8: Temp inaccurate code added to list of alarms
Changes version V1.8 to V1.81: Specifications updated
Changes version V1.81 to V1.82: Position adjustment clarified 4.4.10
Changes version V1.82 to V1.83: Programmable sample time added.
Changes version V1.83 to V1.84: Programmable sample time added.
Changes version V1.84 to V1.85: Company Contact information changed.

Table of contents

1. Introduction....4
1.1. Contact information....5
1.2. Operating principle....5

2. Installation instructions....6
2.1. Calming length....6
2.2. Installation location....7
2.3. Mounting the installation saddle and protector blades....9
2.3.1. Standard installation (See welding drawing in appendix 2)....9
2.3.2. Medium consistency installation (See welding drawing in appendix 2)....10
2.4. Installation of the plug flow straightener....11
2.5. Installation of the sensor unit....13
2.6. Installation of the display unit....14

3. Electrical connections....15

4. Operating and setup instructions....16
4.1. Start-up procedure....16
4.2. Operation of the KC/3 - operator interface....16
4.3. Menu structure....18
4.4. Set-up....20
4.4.1. Select grade....20
4.4.2. Select low limit of measurement span....20
4.4.3. Select high limit of measurement span....20
4.4.4. Output filter....20
4.4.5. Set clock....20
4.4.6. Grade selection mode....21
4.4.7. Select menu language....21
4.4.8. Select blade....21
4.4.9. Error output....21
4.4.10. Position adjustment....21
4.4.11. Password....22
5. Calibration....22

5.1. Calibration menu....22
5.2. Initial calibration....23
5.3. Sampling procedure....24
5.4. Changing calibration parameters....24
5.4.1. Manual adjustment....25
5.4.2. Transmitter calculated parameter change....25
5.5. "One-point calibration"....25
6. Maintenance....27

6.1. Maintenance menu....27
6.2. KC/3 Block diagram....29
6.3. Testing and tuning instructions....30
6.3.1. Preparation....30
6.3.2. Tuning of eddy probe, and adjustment of set screw and zero stop screw....30
6.3.3. Weight set-up....31

Appendix 1: KC/3 installation check list....32
Appendix 2: Installation drawings....35
Appendix 3: Weight-Consistency matrix with default S and Z....41
Appendix 4: Explosion drawings....42
Appendix 5: KC/3 Spare parts kits....45
Appendix 6: KC/3 Model selection table....46
Appendix 7: Technical specifications....47

1. Introduction

This manual covers the installation, operating and maintenance instructions for the KC/3 consistency transmitter. A complete KC/3 transmitter includes the sensor unit, the display unit, and installation accessories as shown in figure 1.1.

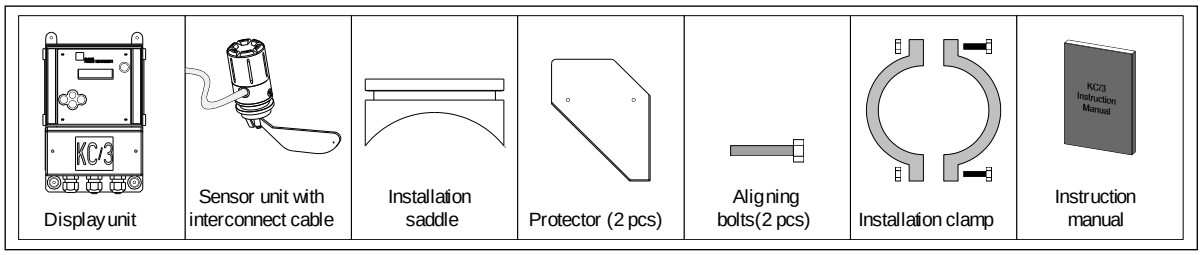

Figure 1.1. The contents of a complete KC/3.

The KC/3 consistency transmitter utilizes a proven measurement principle, our patented seal-less design and all titanium wetted materials (or special stainless steel). This combination of features make the KC/3 extremely tolerant of abnormal process conditions such as: mechanical strikes to the blade sensor and process pressure shocks. There are no seals in contact with the process flow therefore leakage into the sensor unit is virtually impossible. KC/3 wiring connections and signals are described in figure 1.2. KC/3 does not require regular maintenance and is simple to operate. There are no moving parts to wear out.

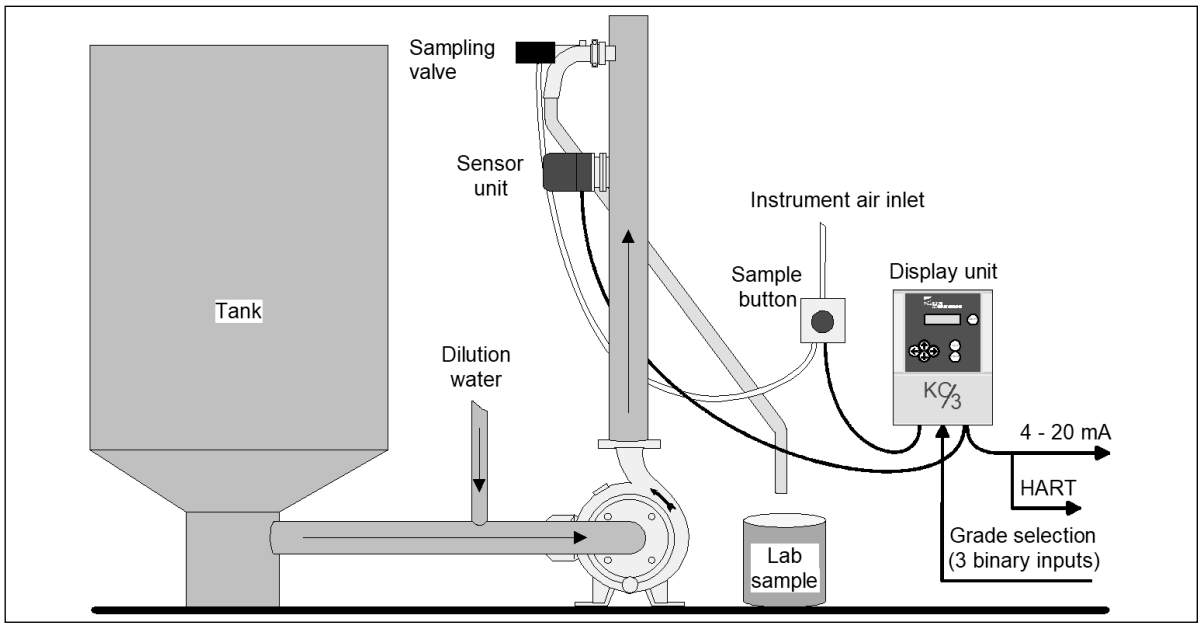

Figure 1.2. Measuring system.

1.1. Contact information

ABB Oy, KPM.
Kettukalliontie 9E
FI – 87100 Kajaani
Finland
Tel: +358 10 22 11
E-mail: fi-kpm@fi.abb.com

Please find your local supplier on internet address www.prokajaani.com

1.2. Operating principle

The KC/3 consistency transmitter operates by measuring the shear force of the pulp as it passes the sensor. Its patented seal-less transfer mechanism makes the KC/3 a virtually unbreakable one. The sensor blade (located in the process stream) measures the sum of shearing forces created by pulp network shearing on the blade and dragging along the sides of the blade. The friction between the fiber network and the blade surface is converted into a output signal that varies as the consistency varies. These forces tilt the blade and move the diaphragm the blade is attached to on the transmitter body. The diaphragm actually acts as a spring and transfers the blade movement to the measuring arm. The displacement of the arm is measured by an electronic displacement sensor (eddy probe) which converts the distance in the gap between the arm and the sensor itself. The shear force value is transformed into gap measurement, which is converted to a consistency value by calibration based on laboratory verification.
An analog 4 - 20 mA output signal is based on consistency signal.

The process flow and the transmitter electronics are completely isolated from each other by the titanium metal diaphragm without the use of seals.

A change in consistency affects shear force, which varies the deflection of the diaphragm thereby altering the displacement of measuring arm. This change in the arm position is sensed by the eddy probe and via the electronics is transformed to current signal (4 - 20 mA) which is proportional to consistency (See figure 1.3). The transmitter is loop-powered (2-wire 4 - 20 mA). Correct calibration for selected grade and proper sampling ensures the accuracy of the Consistency measurement.

The transmitter comes with seven pre-calibrated consistency curves that fit most applications in the mill plus one user defined grade for those special applications.

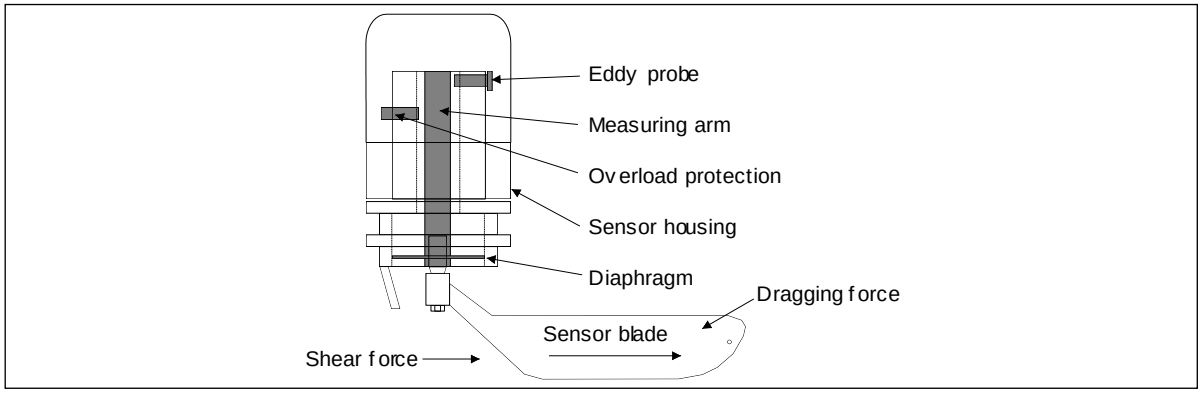

Figure 1.3. Cross-section of the sensor unit.

2. Installation instructions

It is important to properly locate the instrument. The installation location should optimize the performance of the instrument and provide clear access for maintenance.

2.1. Calming length

The consistency transmitter is best installed in a location where uniform flow conditions exist and laminar flow is obtained. If the transmitter is installed immediately after a pump, control valve or elbow in the pipe, it will experience flow turbulence which will affect the plug flow and will upset the measurement. Also consistency flow profile might be skewed in the pipe section located immediately after other process equipment.

Best results are obtained in laminar flow which normally occurs in a straight pipe section of adequate length. When the KC/3 transmitter is installed after the pump the run needs to be long enough to allow any flow turbulence to calm down and laminar flow to occur. We refer to this length as the calming length "L". The calming length "L" is calculated as follows:

Calming length $L_{before} = A \times D$

where, D = diameter of pipe in millimeters or inches

A = calming length factor, see figure 2.1

Calming length $L_{after}(mm) = 0.25 \times L_{before}(mm) + 200$ mm

$L_{after}(inch) = 0.25 \times L_{before}(inch) + 8$ inch

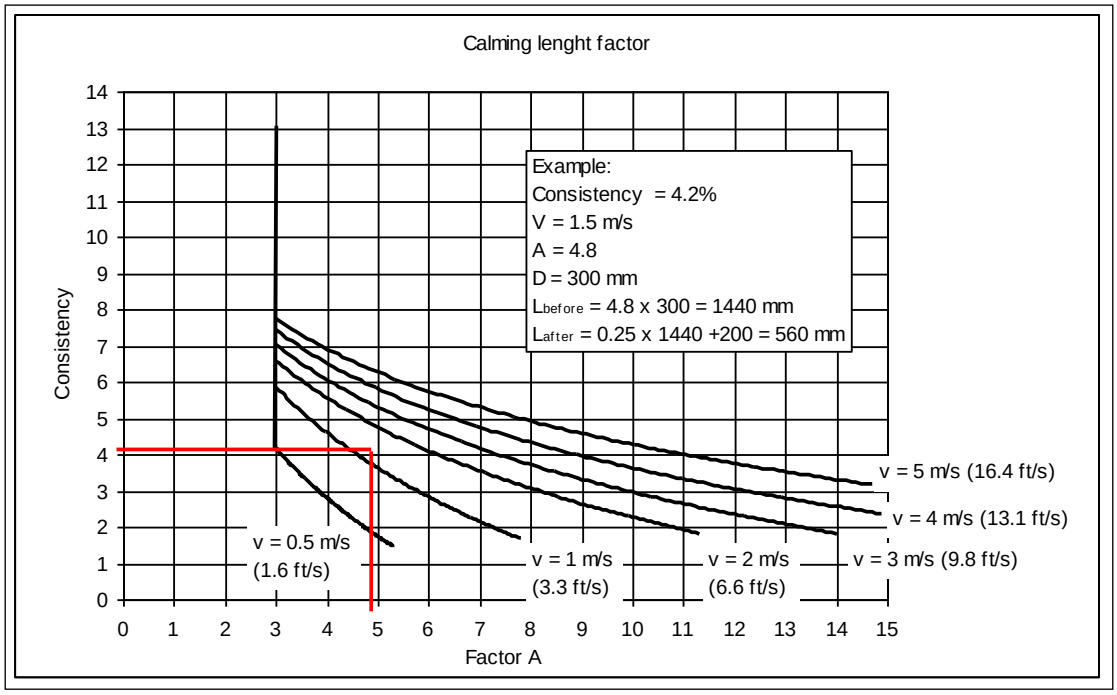

Figure 2.1. Calming length.

If there is not enough straight pipeline for a proper installation please refer chapter 2.4 for flow straighteners and/or contact Kajaani Process Measurements.

2.2. Installation location

Transmitter can be installed in vertical “up-flow” position or horizontal flow, or any inclined up-flow; but never down flowing pipe because of possible air.

Flow straighteners should be used in places where the straight pipe length is not long enough to guarantee laminar flow conditions at the measurement point. See section 2.4.

Vertical “up-flow” pipe section

The transmitter should be installed in the “up-flow” pipe section to ensure that the pipe will be full all the time (See figure 2.2).

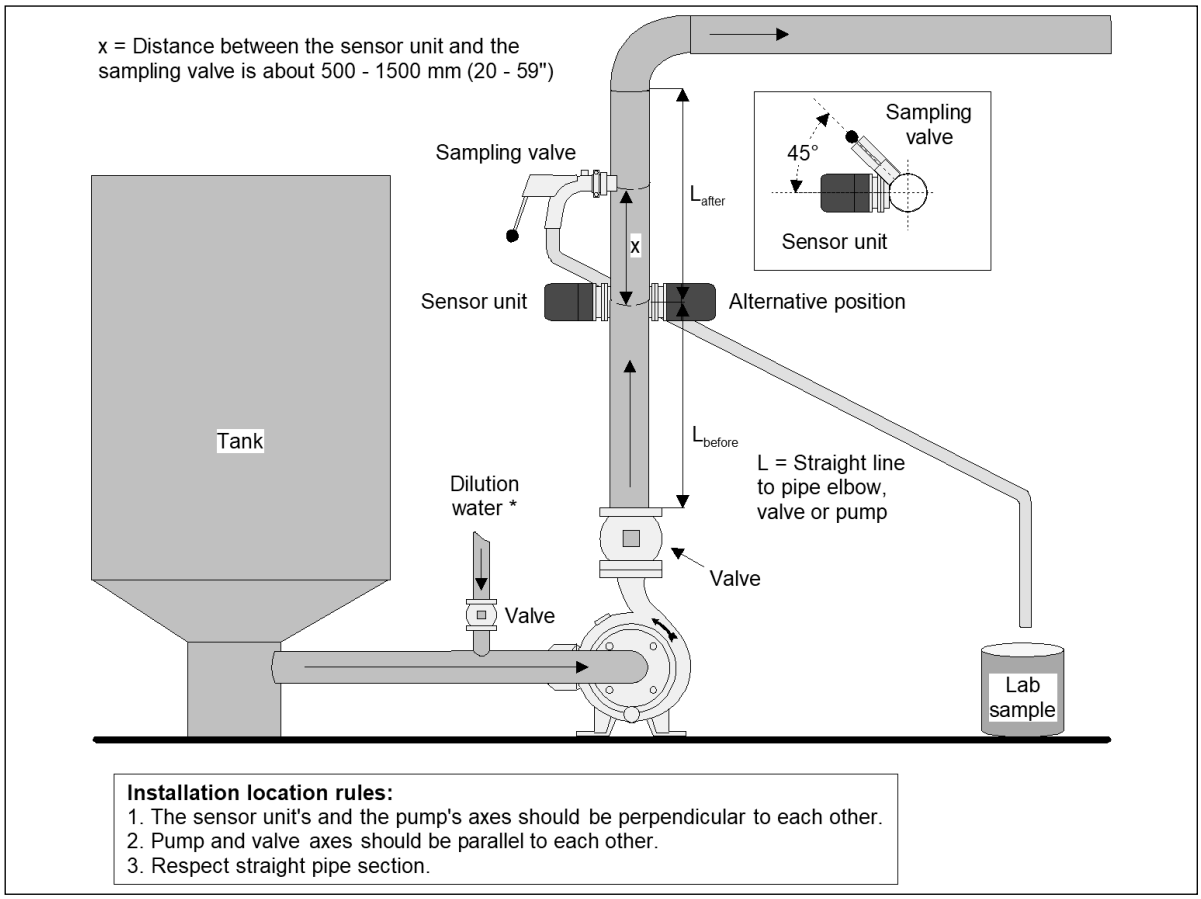

Figure 2.2. Installation in the vertical pipe.

*Tips for the dilution

- Valve should be installed as close to process pipe as possible.
- Pipe should be 20 - 60 mm (0.8 - 2.4“) inside on process pipe.
- Pressure should be 0.3 … 0.8 bar (4.4 … 11.6 psi) higher than process pressure.
- Velocity should be 2 - 3 times greater than pulp flow velocity.

Horizontal pipe

In a horizontal pipe installation the transmitter could be installed on the top of the pipe or in the middle of the horizontal plane on the side of the pipe (See figure 2.3). Installation on the bottom of the pipeline is not recommended. Installing on the top of the pipe may affect the measurement if the top part of the pipe contains air.

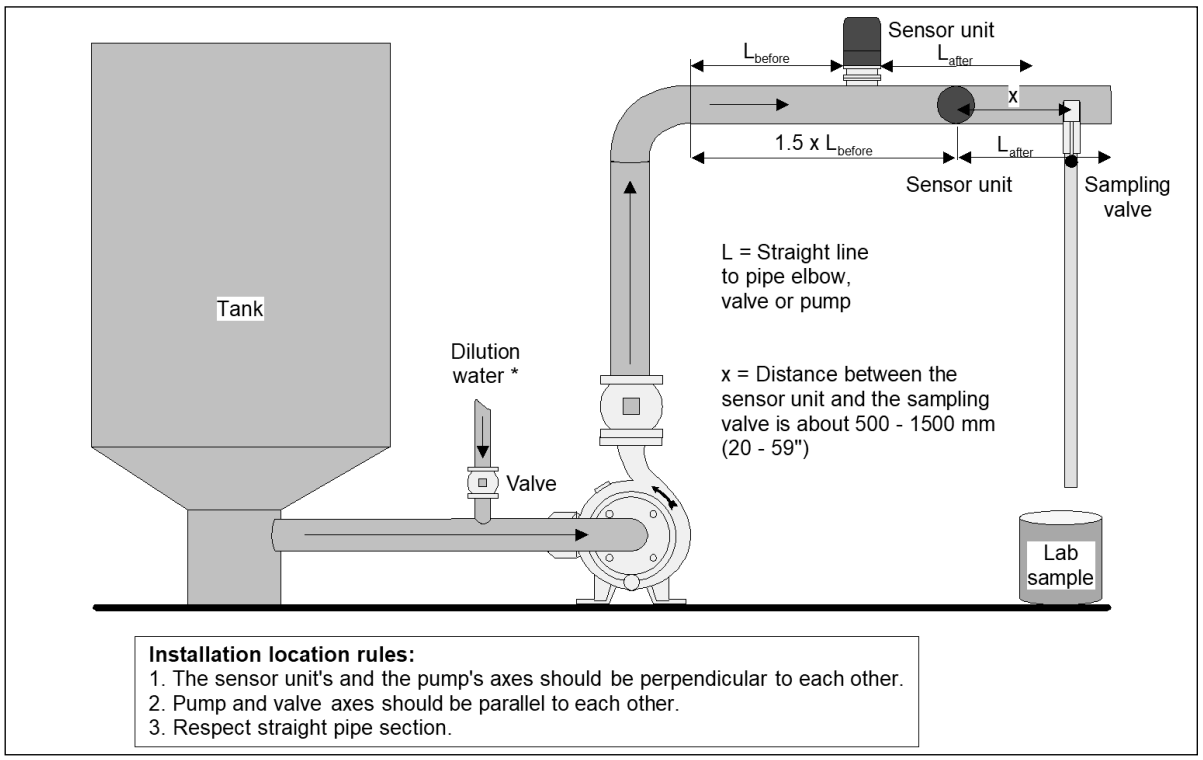

Figure 2.3. Installation in the horizontal pipe.

*Tips for the dilution

- Valve should be installed as close to process pipe as possible.
- Pipe should be 20 - 60 mm (0.8 - 2.4“) inside on process pipe.
- Pressure should be 0.3 … 0.8 bar (4.4 … 11.6 psi) higher than process pressure.
- Velocity should be 2 - 3 times greater than pulp flow velocity.

2.3. Mounting the installation saddle and protector blades

2.3.1. Standard installation (See welding drawing in appendix 2)

1. Verify that the process is shut down, appropriate valves are closed and the pressure inside the pipe is fully released. The pipe should be empty.
2. Cut a hole Ø72 mm (2.8”) in the pipe as shown in figure 2.4. To prevent fiber debris from collecting on the edge of the cut-out, ensure that the edges of the hole inside the pipe are ground smooth. Fiber and or debris collected at this point can interfere the measurement.
3. Shape the saddle to fit the process pipe diameter (Saddle is precut for pipe DN100 (4”) and must be modified for larger line sizes).
4. Place the saddle over the hole in the pipe. Verify that the hole is centered with respect to the saddle and the appropriate distance from the pipe is maintained. Fillet weld around the entire perimeter of the saddle to attach it to the pipe. Saddle must be welded **exactly** parallel to process pipe.

Blade transmitters need protector blades (included in delivery) before and after the sensor blade. This is necessary because during shut downs pulp may dry out and dry fiber plugs may form. When the pump is re-started damage to the sensor unit may occur when these plugs start moving in the line. The protector blades protects the sensor unit from mechanical damage from up or downstream flows that come from dewatered pulp, knots and other stream projectiles hitting the blade. The installation of the protector blades are shown in figure 2.4.

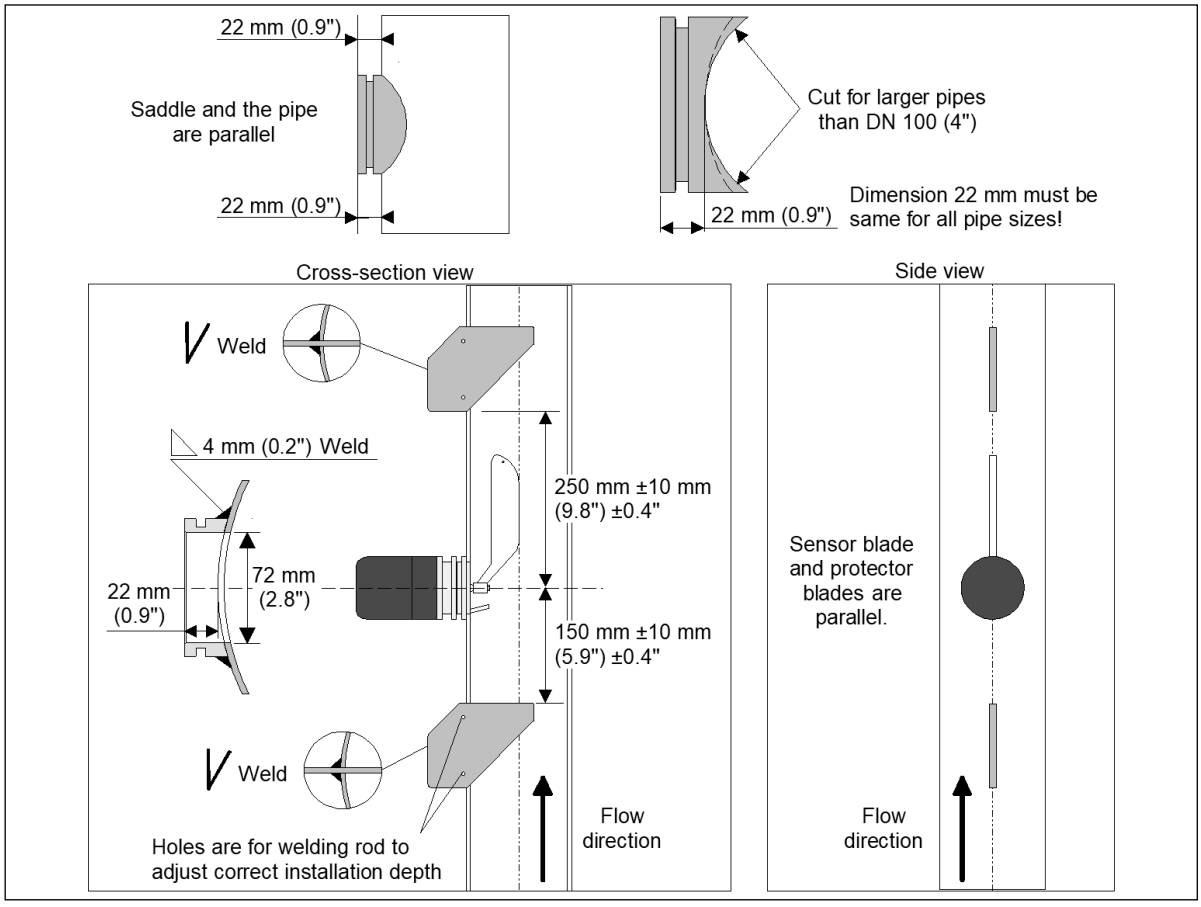

Figure 2.4. Standard blade ST installation. Mounting of the saddle and protector blades.

2.3.2. Medium consistency installation (See welding drawing in appendix 2)

1. Verify that the process is shut down, appropriate valves are closed and the pressure inside the pipe is fully released. The pipe should be empty.
2. Cut a hole in the pipe as shown in figure 2.5. To prevent fiber debris from collecting on the edge of the cut-out, ensure that the edges of the hole inside the pipe are ground smooth. Fiber and or debris collected at this point can interfere the measurement.
3. Shape the saddle to fit the process pipe diameter (Saddle is precut for pipe DN100 (4”) and must be modified for larger line sizes).
4. Place the saddle over the hole in the pipe. Verify that the hole is centered with respect to the saddle and the appropriate distance from the pipe is maintained. Fillet weld around the entire perimeter of the saddle to attach it to the pipe. Saddle must be welded **exactly** parallel to process pipe.

Blade transmitters need protector blades (included in delivery) before and after the sensor blade. This is necessary because during shut downs pulp may dry out and dry fiber plugs may form. When the pump is re-started damage to the sensor unit may occur when these plugs start moving in the line. The protector blades protects the sensor unit from mechanical damage from up or downstream flows that come from dewatered pulp, knots and other stream projectiles hitting the blade. The installation of the protector blades are shown in figure 2.5.

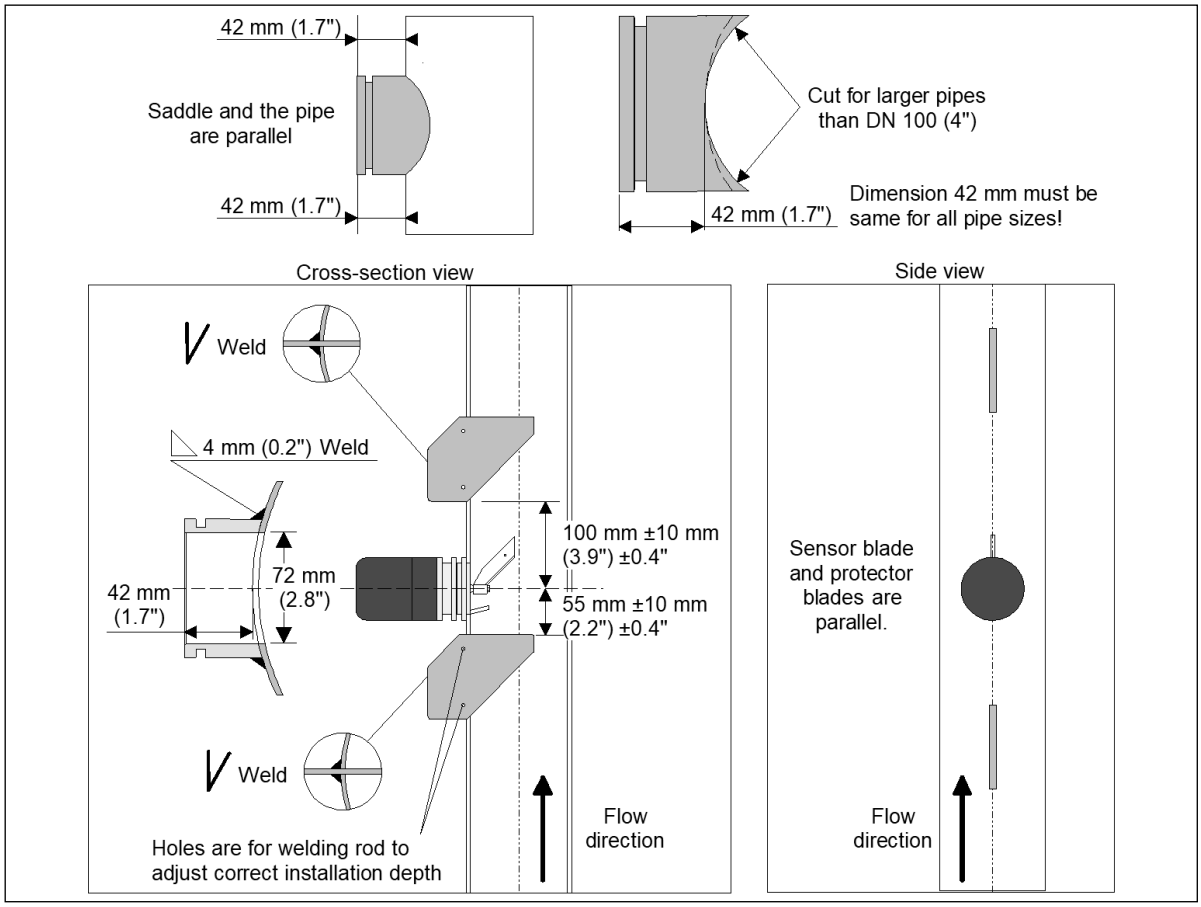

Figure 2.5. Medium consistency MC blade installation. Mounting of the installation saddle and protector blades.

2.4. Installation of the plug flow straightener

A Flow straightener should be used in places where the amount of straight pipe length is inadequate to assure that a laminar flow condition exists at the measuring point.

One way to reduce calming distance “L” is to install a flow straightener upstream from the transmitter (See figure 2.6 & 2.7). Flow straighteners consist of a pair of specially manufactured metal plates, which are welded inside the pipe and located parallel to it. They can effectively neutralize ‘corkscrew’ effect and stabilize the flow so that proper measurement can be accomplished.

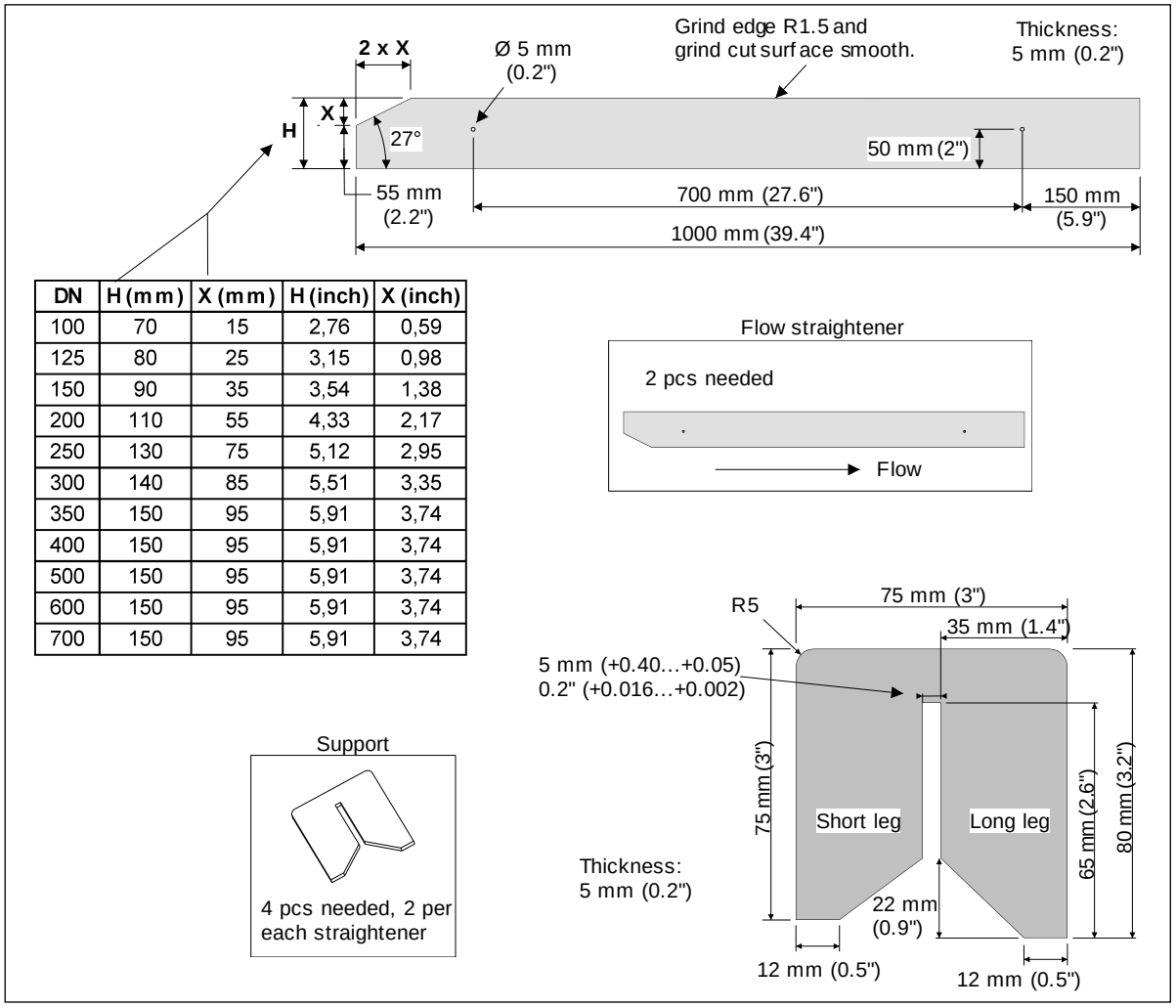

DN	H (mm)	X (mm)	H (inch)	X (inch)
100	70	15	2,76	0,59
125	80	25	3,15	0,98
150	90	35	3,54	1,38
200	110	55	4,33	2,17
250	130	75	5,12	2,95
300	140	85	5,51	3,35
350	150	95	5,91	3,74
400	150	95	5,91	3,74
500	150	95	5,91	3,74
600	150	95	5,91	3,74
700	150	95	5,91	3,74

Figure 2.6. Dimensions of the flow straightener and support.

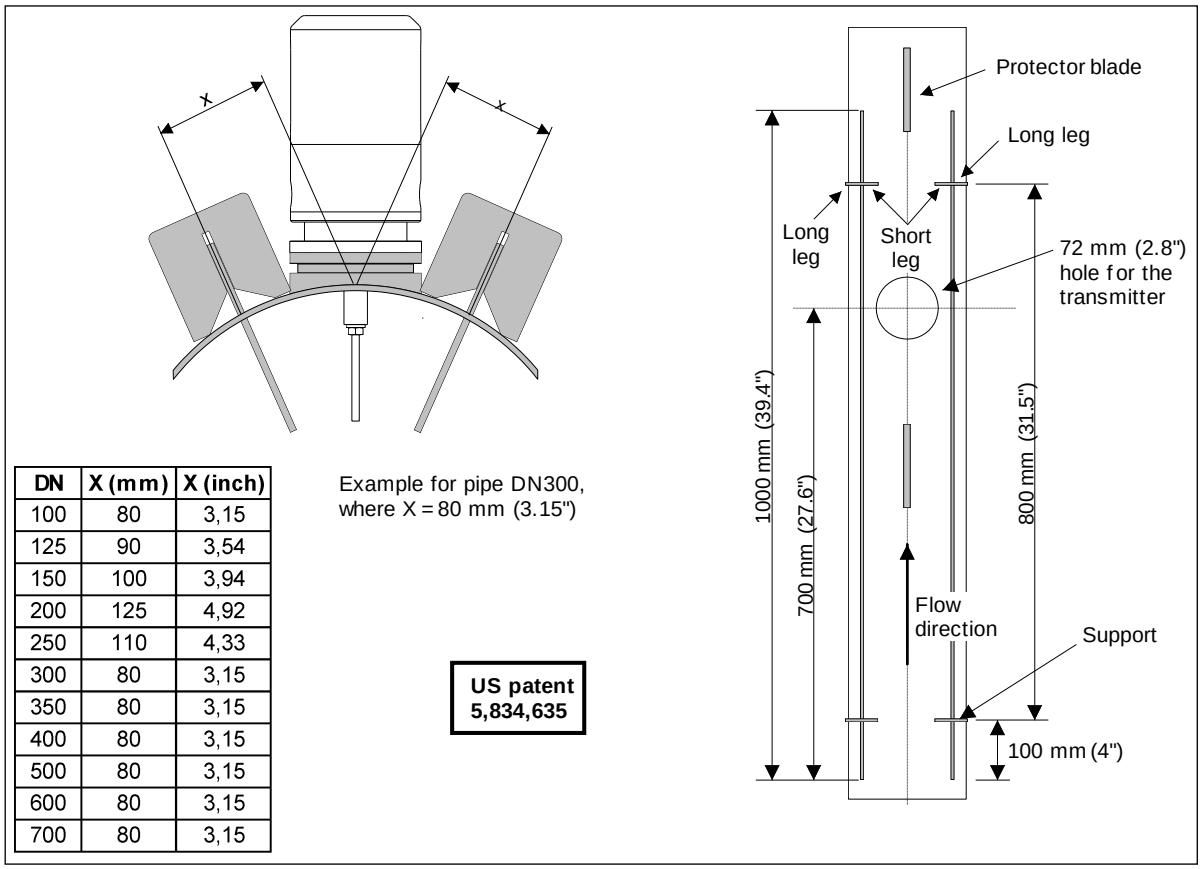

DN	X (mm)	X (inch)
100	80	3,15
125	90	3,54
150	100	3,94
200	125	4,92
250	110	4,33
300	80	3,15
350	80	3,15
400	80	3,15
500	80	3,15
600	80	3,15
700	80	3,15

Example for pipe DN300, where X = 80 mm (3.15")

US patent 5,834,635

Figure 2.7. Installation of the flow straightener.

NOTE

Flow straightener can be ordered from Kajaani Process Measurements or if the customer wants to make his own a complete set of manufacturing drawings can be requested.

2.5. Installation of the sensor unit

1. Insert the sensor through the saddle mounted on the process pipe. Keep the sensor blade parallel to the pipe, pointing downstream with the flow (See figure 2.9).
2. Align the sensor blade **exactly parallel** to the pipe by using the alignment bolts included with the transmitter.
3. Secure the sensor unit in place with the enclosed clamp. Tighten the bolts to a torque of 5.4 kpm (39 lbf-ft).

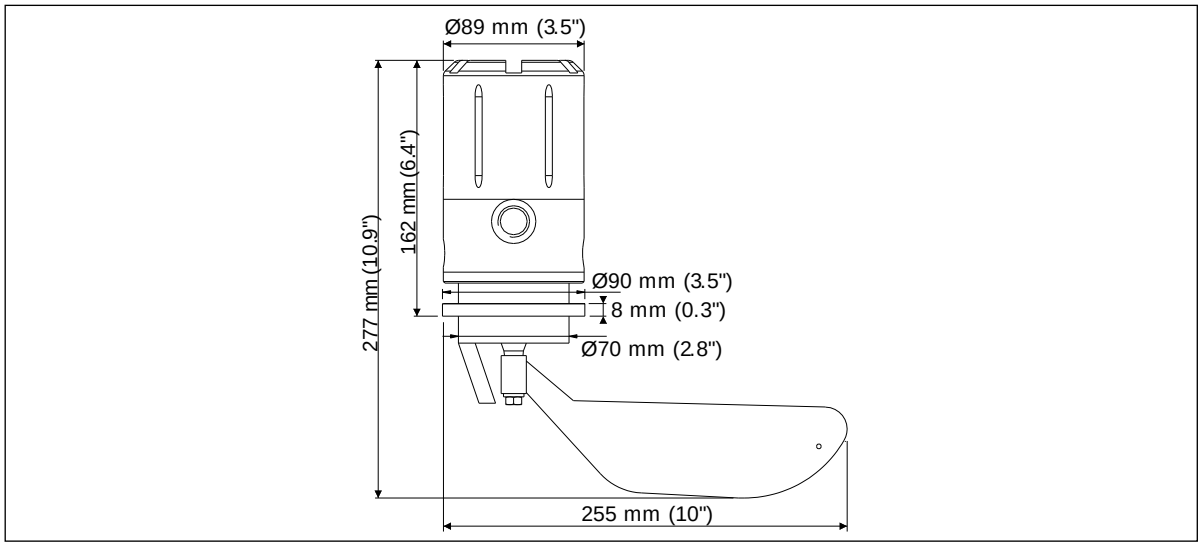

Figure 2.8. Dimensions of the sensor unit.

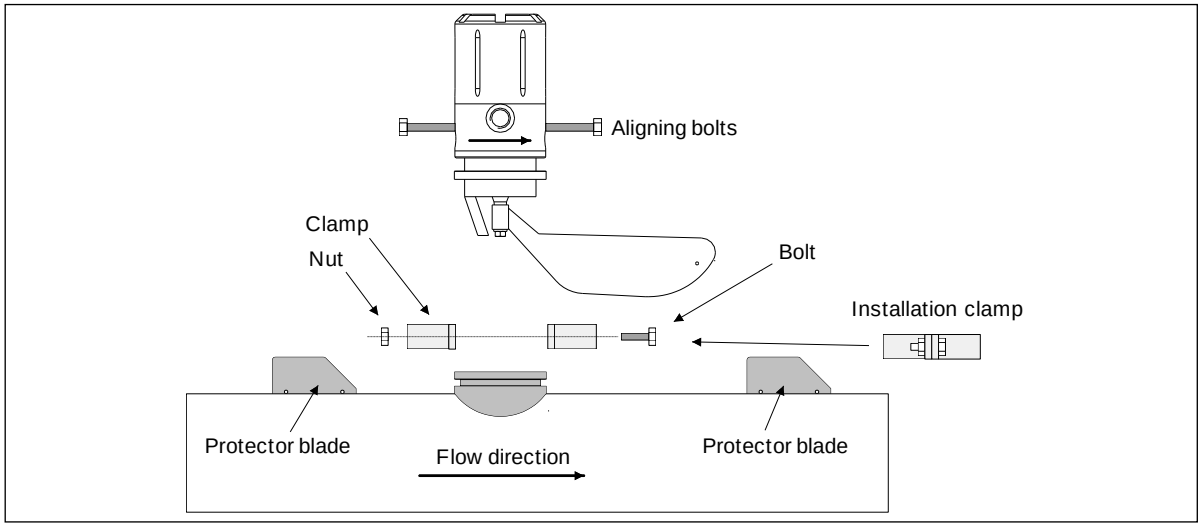

Figure 2.9. Installation of the sensor unit.

NOTE
Blade must point downstream with the flow.

NOTE
The blade must be properly aligned with the process pipe. Misalignment will adversely affect measurement accuracy and performance.

2.6. Installation of the display unit

The display unit part of the KC/3 can be located anywhere near the sensor unit so that it can be easily accessed by mill personnel. Connection cable length is 10 m (33'). Protection class of the display unit enclosure is IP65 (NEMA 4X). Mount the display unit to the wall with four (4) screws (See figure 2.10).

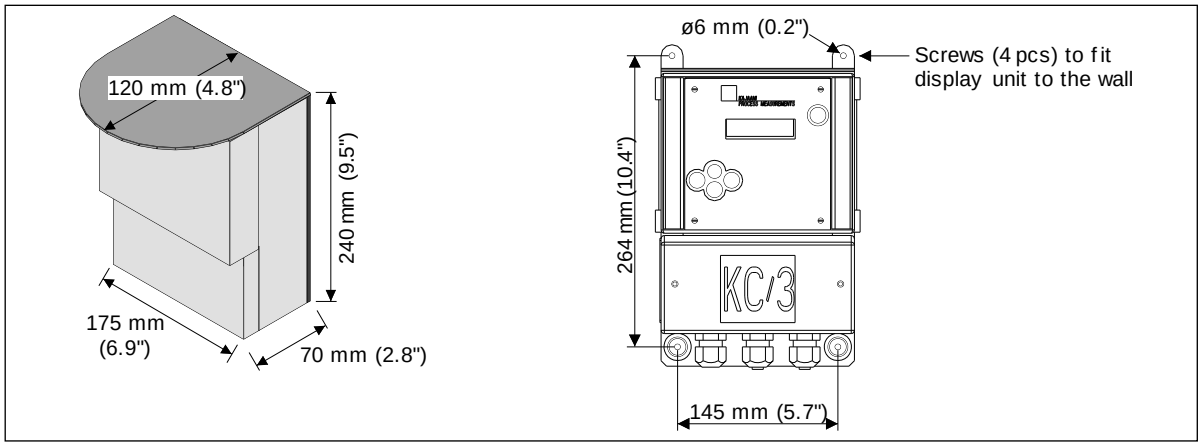

Figure 2.10. Dimensions of the display unit.

3. Electrical connections

Wire the KC/3 as follows:

1. Open the connection box by unscrewing two screws found in the cover located on the lower part of the display unit.
2. Install the inter-connect cable coming from sensor unit and 4 - 20 mA cable coming from DCS to terminals as shown in figure 3.1.
3. Re-install the cover on the display unit.

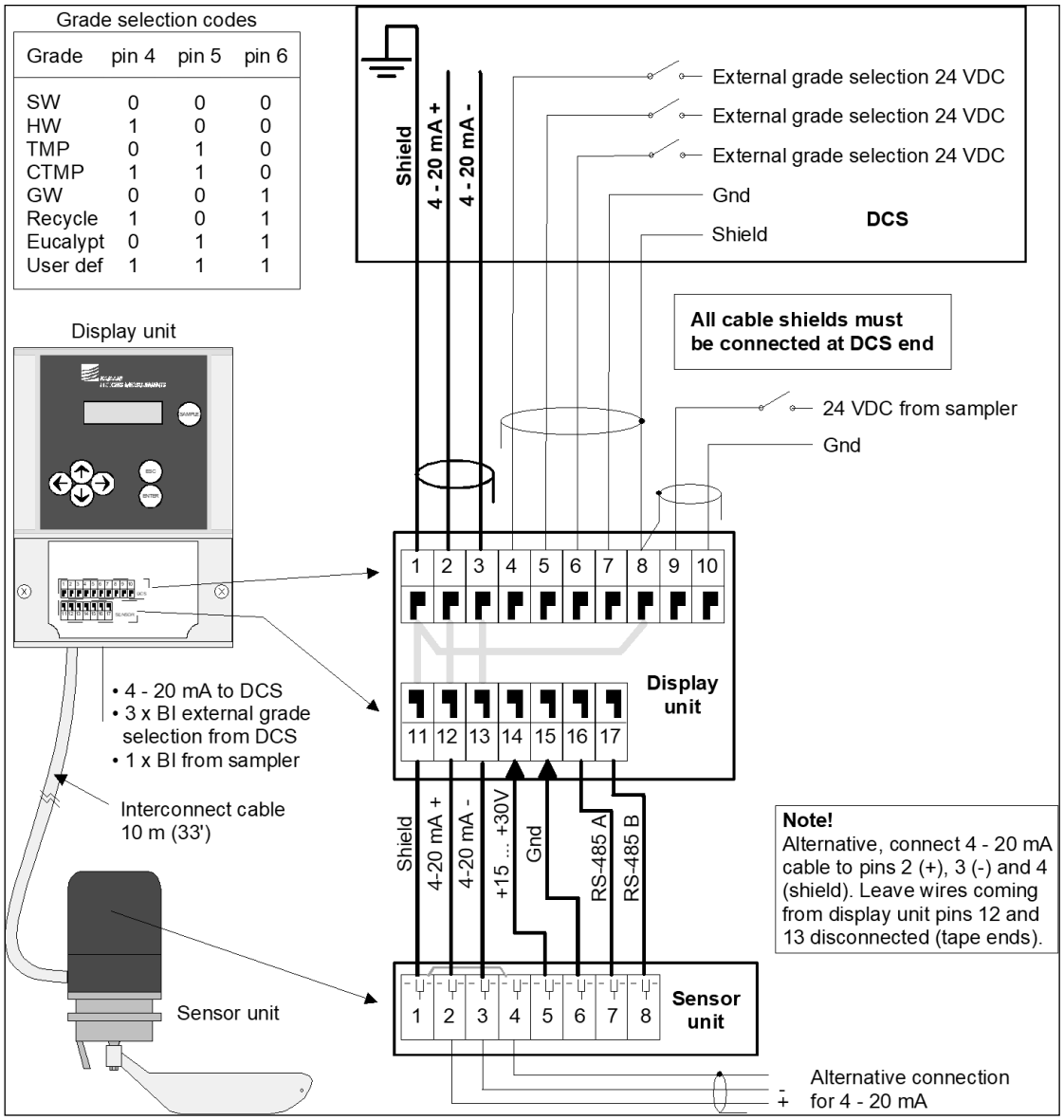

Figure 3.1. Wiring between sensor unit and display unit.

4. Operating and setup instructions

4.1. Start-up procedure

In normal cases instruction in KC/3 installation check list (Appendix 1) are enough. After KC/3 is installed and 4 - 20 mA cable connected, wait until process has reached normal operating conditions and is stable. Then perform position adjustment to eliminate effect of different installation position.

Start-up of KC/3 consists following steps:

A. SET-UP: Type SET-UP parameters described in chapter 4.4. Set-up parameters except position adjustment can be entered beforehand, even in workshop prior installation.

B. Perform position adjustment:
Recommended procedure: Position adjustment is recommended to be performed when the process is running in normal operating conditions. Depending on installation position, gravity will affect blade in different way. Position adjustment is done to eliminate this effect. See chapter 4.4.10.
Alternative procedure: Position adjustment can be performed when process pipe is empty, but in that case the value has to be changed manually to correct for lifting force of water.

C. CALIBRATION: Calibration is described in chapter 5.

4.2. Operation of the KC/3 - operator interface

All the functions of the KC/3 are easily configured through the clear screen (See figure 4.1). Operation of KC/3 is menu driven. The arrow keys allow movement between the menus. The menu structure is divided into three main function blocks entitled: Calibration, Set-up and Maintenance. The menu structure of the KC/3 user interface is shown in appendix 1.

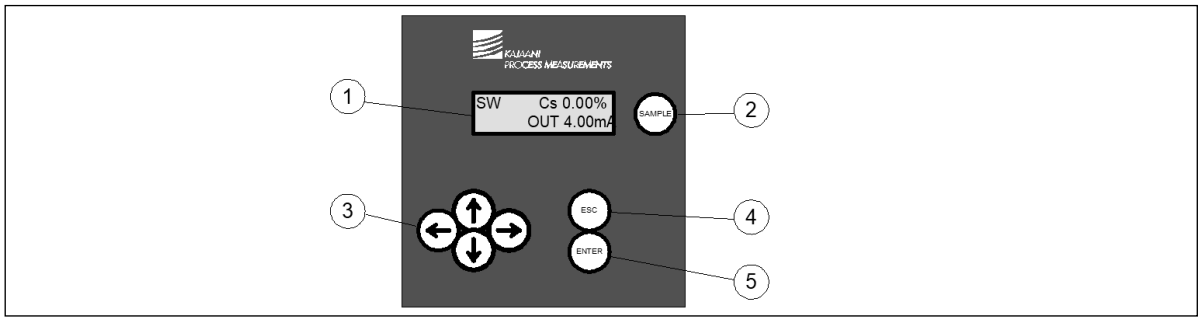

Figure 4.1. The KC/3 user interface.

1. The display is 2 lines wide x 16 characters in length. Main display shows both consistency value in percent and the analog output in mA. Display shows also current grade in the left upper corner. Menu display returns to main display automatically (See figure 4.1).
2. Sample key. When activated, a 30 second countdown timer starts to show so as to identify when to take the sample. The display unit stores date, time and the measured consistency value averaged over 30 seconds time in its memory for later comparison to the lab values. This way it is easy to identify laboratory samples so that it correspond in time to the consistency readings of the transmitter.

3. Arrow keys - Arrow keys are used to move between menus or to adjust values. Please refer to menu structure for more information about the arrow keys.
4. Esc key - press to delete changes and/or return back to the previous menu.
5. Enter key - press to accept data and input changes.

4.3. Menu structure

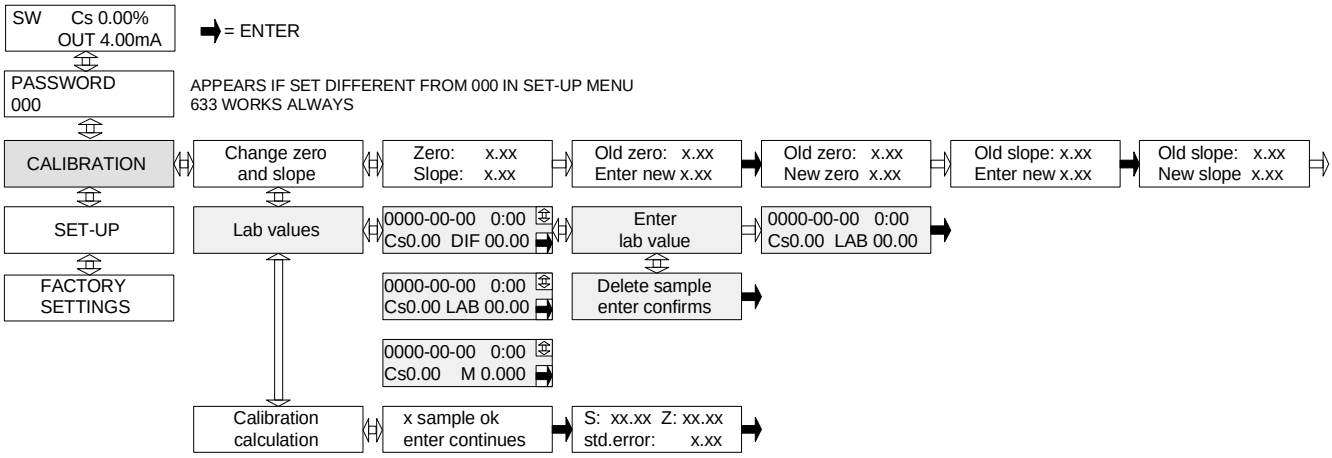

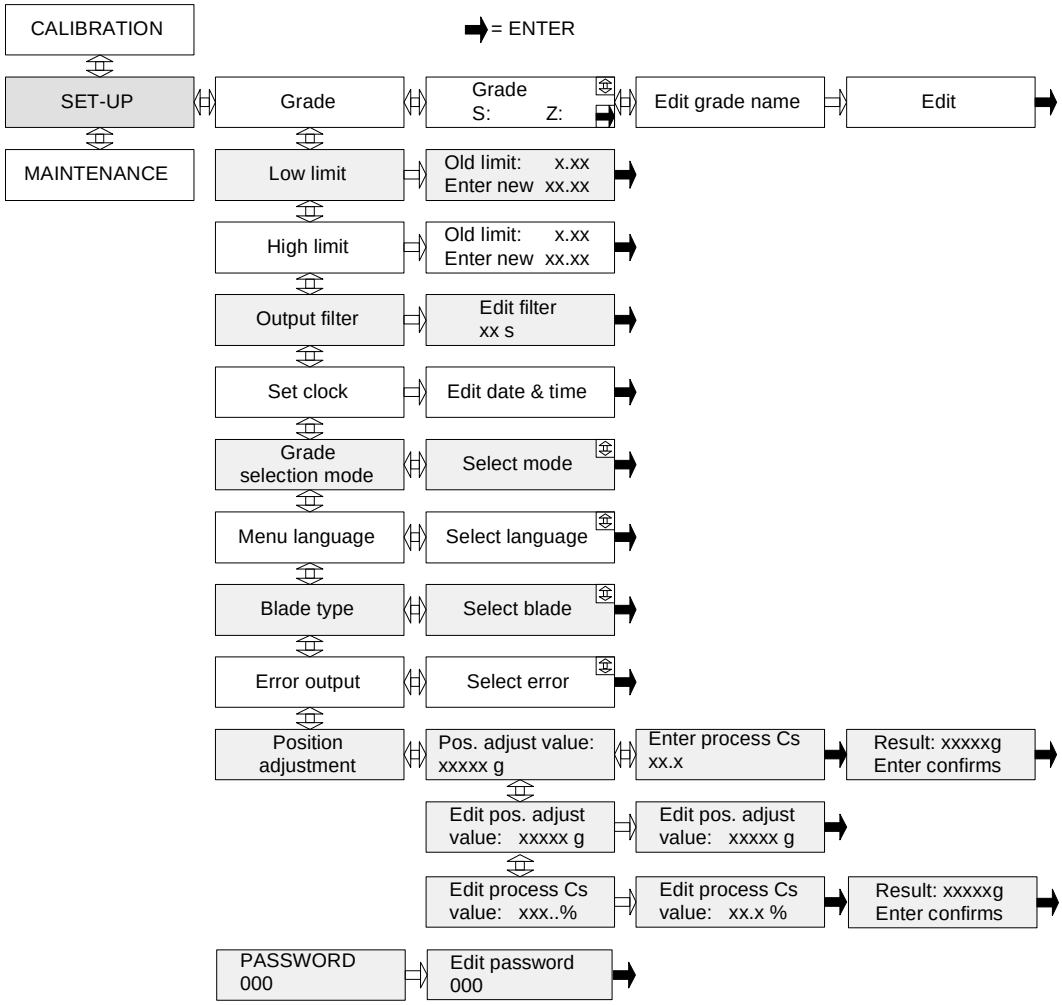

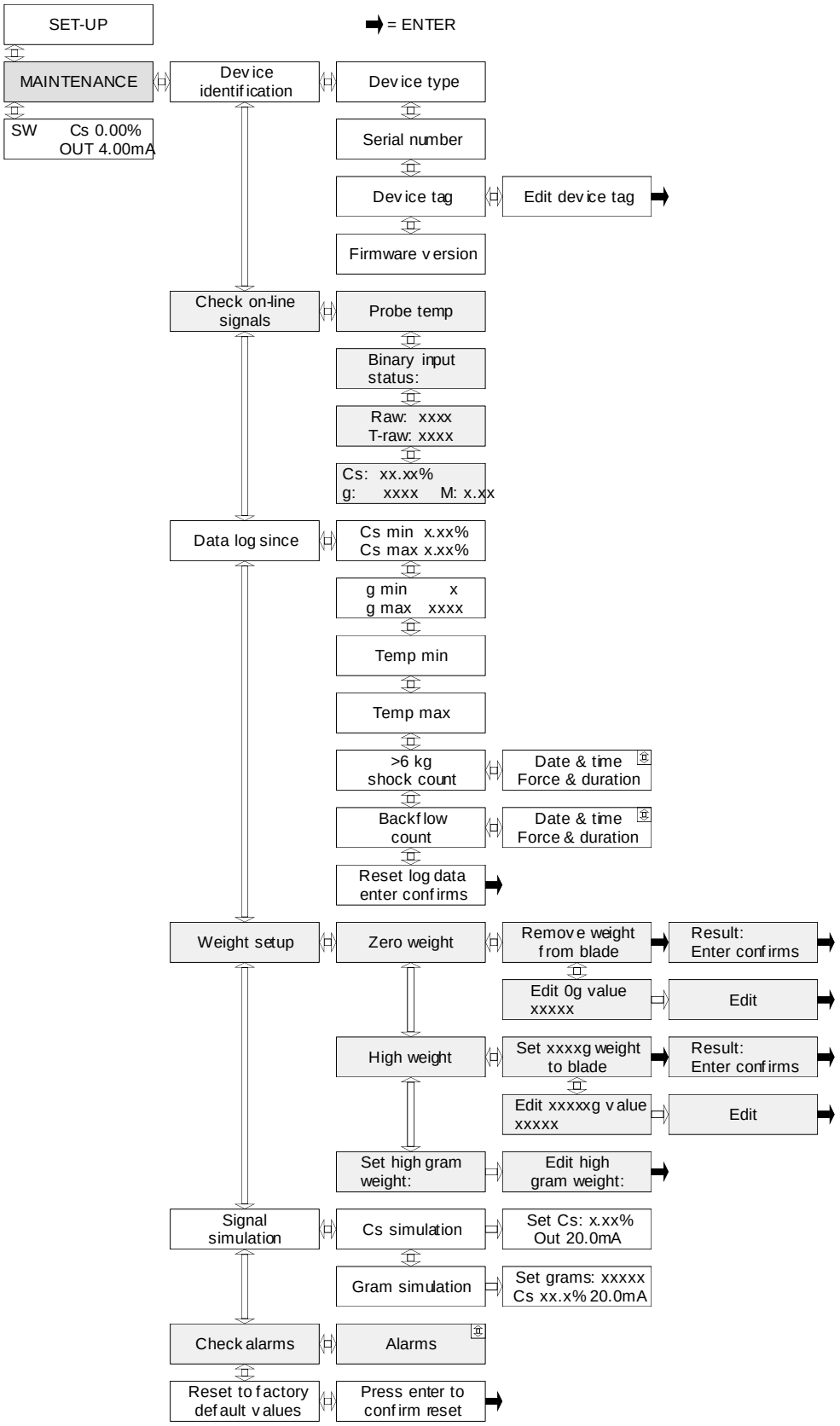
SET-UP
➡ = ENTER
MAINTENANCE
SW Cs 0.00%
OUT 4.00mA
Device identification
Device type
Serial number
Device tag
Edit device tag
Firmware version
Check on-line signals
Probe temp
Binary input status:
Raw: xxxx
T-raw: xxxx
Cs: xx.xx%
g: xxxx M: x.xx
Data log since
Cs min x.xx%
Cs max x.xx%
g min x
g max xxxx
Temp min
Temp max
>6 kg shock count
Date & time
Force & duration
Backflow count
Date & time
Force & duration
Reset log data
enter confirms
Weight setup
Zero weight
Remove weight from blade
Result:
Enter confirms
Edit 0g value
xxxxx
Edit
High weight
Set xxxxg weight to blade
Result:
Enter confirms
Edit xxxxxg value
xxxxx
Edit
Set high gram weight:
Edit high gram weight:
Signal simulation
Cs simulation
Set Cs: x.xx%
Out 20.0mA
Gram simulation
Set grams: xxxxx
Cs xx.x% 20.0mA
Check alarms
Alarms
Reset to factory default values
Press enter to confirm reset

4.4. Set-up

4.4.1. Select grade

The user can change grade manually or by binary inputs from a remote device. The current grade selection mode (local or remote) is shown below the menu name (See chapter 4.4.6). Each blade has a predefined S (Slope) and Z (Zero) parameters for 8 different pulp grades (SW, HW, CTMP, TMP, GW, RECYCLE, EUCALYPT and USER DEF). Grade names can be edited (See menu structure). Edited grade names are use as long as the factory reset is done when default names of chosen language are taken use. The factory default values are stored by blade and furnish permanently in the KC/3 memory (See table 5.1). When the transmitter is set up for the first time the factory default values are selected for use. User can change these parameters during the calibration and KC/3 will use latest parameters chosen for each grade. Select the grade as follows:

1. Press twice "↓" button and select "Set-up" menu by pressing "→" button.
2. Press "→" button to select "Change grade" menu. Select the grade by scrolling menu with "↓" or "↑" buttons and press "ENTER" button.
3. Press "↓" or "↑" to proceed to next set-up function or press twice "ESC" button to return to the main menu or wait 30 seconds and the program will automatically return to the main menu.

4.4.2. Select low limit of measurement span

The low limit setting can be adjusted between 0.00 and 19.99 %/Cs. This value corresponds to output current 4 mA. Low limit **must** be smaller than high span. Adjust the low limit as follows:

1. Press twice "↓" button and select "Set-up" menu by pressing "→" button.
2. Press "↓" button and select "Low limit" menu by pressing "→" button. The display shows current low span setting.
3. Enter a new low limit by changing the old value by using the arrow keys. Use up (increasing) and down (decreasing). To accept press "ENTER" button. The display shows current low span setting.
4. Press "↓" or "↑" to proceed to next set-up function or press twice "ESC" button to return to the main menu or wait 30 seconds and the program will automatically return to the main menu.

4.4.3. Select high limit of measurement span

The high limit can be adjusted between 0.00 and 19.99 %/Cs. This value corresponds to output current 20 mA. High limit **must** be larger than low span. Adjust the high limit as follows:

1. Press twice "↓" button and select "Set-up" menu by pressing "→" button.
2. Press twice "↓" button and select "High limit" menu by pressing "→" button. The display shows current high span setting.
3. Enter a new high span by changing the old value by using the arrow keys. Use up (increasing) and down (decreasing). To accept press "ENTER" button. The display shows current high limit setting.
4. Press "↓" or "↑" to proceed to next set-up function or press twice "ESC" button to return to the main menu or wait 30 seconds and the program will automatically return to the main menu.

4.4.4. Output filter

The user can filter out process noise, or abnormal spikes, from the output signal with this function. Filtering time is expressed as seconds (default = 10 s).

4.4.5. Set clock

Date and time must be given in "yyyy-mm-dd hh:mm" format. Set the clock as follows:

1. Press twice "↓" button and select "Set-up" menu by pressing "→" button.

2. Press four times "↓" button and select "Set clock" menu by pressing "→" button. Enter date and time and press "ENTER" button.
3. Press "↓" or "↑" to proceed to next set-up function or press twice "ESC" button to return to the main menu or wait 30 seconds and the program will automatically return to the main menu.

4.4.6. Grade selection mode

The user can select between local (default) and remote grade selection through binary inputs.

4.4.7. Select menu language

Selectable languages are English (default) and Finnish. Select the language as follows:

1. Press twice "↓" button and select "Set-up" menu by pressing "→" button.
2. Press three times "↑" button and select "Menu language" menu by pressing "→" button. Select language by scrolling menu with "↓" and "↑" buttons and press "ENTER" button.
3. Press "↓" or "↑" to proceed to next set-up function or press twice "ESC" button to return to the main menu or wait 30 seconds and the program will automatically return to the main menu.

Grade names will change to desired language by factory reset.

4.4.8. Select blade

The user selectable blade types are Standard (ST, default), Medium Cs (MC), and Recycle (RU). The user has to select the blade that is installed on the sensor. Select the blade as follows:

1. Press twice "↓" button and select "Set-up" menu by pressing "→" button.
2. Press twice "↑" button and select "Blade" menu by pressing "→" button. Select the current blade by scrolling menu with "↓" or "↑" buttons and press "ENTER" button. Program returns back to "Blade" selection menu.
3. Press "↓" or "↑" to proceed to next set-up function or press twice "ESC" button to return to the main menu or wait 30 seconds and the program will automatically return to the main menu.

4.4.9. Error output

The user can select desired function in case of error. There are following options: NO EFF., 3.5 mA, 22 mA and FREEZE. Error output is used when the gap between the measuring arm and the sensor is too small or when the weight setup is not correct. See more information from chapter 6.1 - Check alarms.

- NO EFF: Means that measurement continues normally even through the value of output is maybe erroneous (default).
- 3.5 mA: Means that analog output goes to 3.5 mA during error.
- 22 mA: Means that analog output goes to 22 mA during error.
- FREEZE: Means that output freezes on the last accepted measurement value.

4.4.10. Position adjustment

Position adjustment is IMPORTANT to perform during start-up to get measurement working properly. This setup is forcing the measured signal to correct level. Position adjustment is done after process has stabilized and in normal process consistency.

Enter current process consistency (estimated value) for the KC/3 and it automatically adjusts the measurement signal level to match the given consistency. The procedure automatically corrects for blade position and the lifting force of water (Archimedes' law). Verify the entered consistency value by taking laboratory sample right after. If the laboratory result varies from the estimated value then You can edit "Process consistency value". Position adjustment can be edited also manually in some special cases.

Position adjustment is done only once during start-up. Following calibrations are done by adjusting Zero or Span in calibration menu.

1. Go to SET UP→POSITION ADJUSTMENT→POS. ADJUST VALUE→ENTER PROCESS Cs

2. Feed in the consistency which you think the line has and press ENTER; “WAIT A MOMENT” appears on display when KC/3 averages for 5 seconds measurement signal. “RESULT: XXX g ENTER CONFIRMS” appears when position adjustment measurement is completed.

3.Take lab sample same time (or right after) as KC/5 averages process signal. Sample is to verify that consistency you told to KC/3 is correct. Entered process consistency can be edited manually afterwards.

4.Press ENTER to accept the new position adjustment value XXX g. ESC means the adjustment procedure is cancelled.

NOTE

For best result position adjustment is done after the installation of the transmitter when the process has reached normal operating conditions.

NOTE

If real process consistency is not known when position set-up is done, correct process consistency can be edited later on as laboratory result is available.

4.4.11. Password

Password 000 means no password. If password is set different from 000 it is required to get into any menu from main display. (If password is forgotten, password 633 works always.)

5. Calibration

Separate calibration is required for each selected blade and pulp type. Transmitter can be calibrated against laboratory by taking samples or by choosing default values from the sensor memory.

5.1. Calibration menu

Consistency calibration is made by linear curve.

Cs = S x M + Z

S = Slope, M = Linearized measurement and Z = Zero.

Change zero and slope:

The user can review and adjust the Z and S values from this display setting. Zero Z can be adjusted from -99.99 to +99.99. Slope S can be adjusted from 0.00 to +19.99.

Lab values:

The user can review the last 10 samples; sampling times, measured values, and lab values. Through this display the new lab values are entered or old values edited, or samples removed by delete function.

Calibration calculation:

KC/3 can be requested to calculate new Z and S values based on minimum of 3 sets of stored calibration data.

Recommendation: Use of a spreadsheet program (e.g. Excel™) is recommended on calibration over the instrument aided calculation. Spreadsheet provides better visualization of the data points for example calibrated range and to remove outliers (unreliable samples) from calibration data.

5.2. Initial calibration

Initial calibration is made after first selecting blade type (ST, MC or RU) in "Set-up menu" to correspond installed blade in KC/3. Then select Grade from the same menu.

1. Go to "Set-up" menu and enter by pressing "→" button.
2. Display shows the selected grade. If needed, enter grade selection mode by pressing "→" button. With "↓" and "↑" buttons select desired grade and accept by "ENTER". The name of any grade can be edited by entering "edit grade name" mode with "→" button. Factory defaults for calibration parameters S and Z are shown in table 5.1.
3. Select "Blade" menu. Display shows the type of current blade. If needed, enter to "Select Blade" mode by pressing "→" button. Select the proper blade by scrolling menu with "↓" or "↑" buttons and press "ENTER" button.
4. Go to "Position adjustment" menu. Type in the consistency in the line and accept the grammage calculated by KC/3. KC/3 is now calibrated to given consistency.
5.

NOTE

The accuracy of initial calibration depends on the reliability of consistency value entered to KC/3. For the best result wait until process has reached stable operating conditions.

NOTE

Factory defaults for S and Z cannot be changed.

Table 5.1. Default values for S and Z.

Blade:	Standard (ST)		Medium Cs (MC)		Recycle (RU)		Low Cs (LC)	
Grade:	S	Z	S	Z	S	Z	S	Z
SW	2.1	-8.0	2.5	-6.5	2.8	-5.0	1.0	-1.2
HW	1.8	-5.5	2.2	-5.2	2.5	-7.0	1.4	-4.0
TMP	2.2	-7.0	1.4	-3.1	3.1	-8.0	1.0	-2.4
CTMP	2.2	-7.0	1.4	-3.1	3.1	-8.0	1.0	-2.4
GW	2.4	-10.0	1.6	-4.0	2.4	-2.7	1.2	-2.7
Recycle	1.8	-6.7	1.9	-4.5	3.0	-5.0	1.4	-5.0
Eucalypt	2.3	-9.0	2.2	-5.2	3.0	-7.0	1.5	-4.3
User def	3	-2.0	3	-2.0	3	-2.0	1.5	-5.0

5.3. Sampling procedure

Laboratory sample can be taken and stored in KC/3 memory by following procedure:

1. Press “SAMPLE” button. The display shows “SAMPLING TIME LEFT XXs”. Sampling time can be programmed in Factory setting menu and it can be between 5 and 30 seconds in 5 second intervals. During the 30 sec countdown the KC/3 averages 30 seconds worth of the measurement value and stores the data together with sampling time in the calibration data memory.
2. You must take the sample during the count down time, so determining Sampling time it should be noted that it is possible to take sample during that time.
3. KC/3 displays the measured value Cs %, Raw measurement M and the MIN-MAX reading. MIN - MAX value indicates process stability during the sampling time. If the consistency value is in transition during the sampling time, the sample drawn may not reflect the real consistency value and may not be reliable for calibration. In this instance sampling should be repeated. Measured value is accepted and stored in memory by pressing “ENTER” **or automatically after 5 minutes** when the display returns to main display. By pressing “ESC” the sample is discarded and display returns to the main menu.
4. Analyze the sample in laboratory.
5. Enter laboratory results into KC/3 memory.
6. Select “Lab values” from “Calibration” menu. The display shows latest sampling time with measured averaged value and delta consistency (“DIF”) over the sampling time. “ENTER” button scrolls between “DIF”, Lab Cs%, or M values. If “DIF” is over 1 Cs % this sample is rejected from calculations.
7. Scroll with “↓” or “↑” buttons to reach proper sample data. Time serves as an unambiguous ID for the samples.
8. Press “→” button to select desired data. Menu prompts “ENTER LAB VALUE”. Enter by “→” button, feed in the lab value, and press “ENTER” to confirm the fed lab value or “ESC” to discard it.
9. If sample data is not acceptable (e.g. large swing in consistency during sampling) press “↓” button to select “DELETE SAMPLE” mode and press “ENTER” to discard the sample values.

5.4. Changing calibration parameters

There are two possible ways of adjusting the calibration values:

- Change Z and S manually. See chapter 5.4.1
- Let KC/3 calculate a new Z and S based on stored calibration data. See chapter 5.4.2

5.4.1. Manual adjustment

Calibration parameters can be calculated using e.g. a spreadsheet program. Offset adjustment is done simply by changing zero value.

1. Enter into “Calibration” menu. The display shows “Change Zero and Slope”. Press “→” button to see current Z and S values.
2. Press “→” button to move to edit mode. Enter new Z value and press “ENTER”. To retain old value press “ENTER” without inputting a new value. Display switches to show old and new Z values.
3. Press “→” button to edit S value. Repeat step 2 for S.
4. Press “→” button and display returns to show new Z and S. Press “ESC” three times to return to the main display or wait 30 seconds and the program will automatically return to the main menu.

5.4.2. Transmitter calculated parameter change

When minimum of 3 laboratory samples have been collected and results entered into KC/3 memory, the transmitter can be asked to calculate calibration parameters. To activate the calculated parameters requires user acceptance.

1. Select “Calibration” menu and go to “Calibration calculation” by pressing “→”.
2. The display shows “# SAMPLES OK ENTER CONTINUES”. # must be 3 or higher otherwise transmitter refuses to calculate parameters. In case # is less than 3 display shows “Invalid Samples”.
3. Press “ENTER” to calculate new S and Z with the aid of laboratory samples. The display shows the new values, and estimated error of calibration. Press “ENTER” button to accept the new calibration parameters and program will automatically return to the main menu. Press “ESC” to retain old values.
4. If the old values were retained press twice “ESC” button to return to the main menu or wait 30 seconds and the program will automatically return to the main menu.

NOTE

KC/3 requires minimum of 3 laboratory samples to calculate calibration parameters.

NOTE

Calibration data is stored in a stack of 10 data pairs. It works on FIFO principle. When calculating calibration parameters KC/3 uses all the data in the memory at that time.

NOTE

Estimated error of calibration indicates the reliability of calibration data and can be used to judge if calculated parameters are acceptable or not.

5.5. “One-point calibration”

One-point calibration is normally enough. The factory default S-values for different kind of pulps are close enough and usually only offset adjustment is needed. This is done by changing Z value.

1. Take the sample.
2. Read the transmitter’s consistency reading.
3. Make lab analysis.

4. Adjust Z to make lab and transmitter reading match.

Example: KC/3 reading 3.2%
Lab result 3.5%

New Z = old Z + 0.3 If old Z = -7.0 New Z = -6.7

6. Maintenance

KC/3 does not require any regular maintenance. By means of the maintenance menu a user can evaluate the performance of the unit, or behavior of the process. He can also reset default values or measurement range of the transmitter.

6.1. Maintenance menu

Device identification:

The user can view following product information: device type, serial number, tag number and firmware version. The tag number can be selected and edited by the user. All other information is in the permanent memory.

Check on-line signals:

The user can view following values in real time: sensor temperature, raw-signal from eddy probe (RAW), temperature compensated raw signal (T-RAW), grams (shear force measurement), M (linearised measurement signal) and consistency measurement (Cs % = Slope x M + Zero).

Data log since:

The user can view following data: Cs min/max, g min/max, temp min/max, and the number of abnormal shocks (hits) on the blade (force on blade corresponding < –100 grams and > 6000 grams). The time since the last reset is shown with the data. The data logs can be cleared in the “Log clearing” menu.

Weight setup:

Used to bench calibrate the sensor after service.

Zero grams: Adjust the low limit of the measurement range. Can be used to re-zero the sensor signal while no weight is applied to the blade. Displays the old zero-reading and the new one. New value is accepted by pressing “ENTER” button.

High grams: Sets the upper limit of the measurement range when applying the desired span weight to the blade. Factory setting is 3000 grams. Displays the old and new values. Resetting requires user acceptance (“ENTER”).

Set high gram weight: Set the weight that you are using for high grams (2 - 6 kg, default 3 kg).

Signal simulation:

The output signal (4 to 20 mA) can be checked by this function. Simulates the output current corresponding the consistency value and output scaling. Simulated signal can be entered either Cs-% reading (CS simulation) or grams (Gram simulation) corresponding to 0-8000 grams.

Check alarms:

Current active alarms (number shown in brackets) will be displayed in this menu. User can view following internal alarm flags:

- Gap too small: The gap between the measuring arm and the sensor is too small. Alarm sets the current output to alarm mode and display shows “ERR” -status.
- Gap too big: The gap between the measuring arm and the sensor is too big. Alarm sets the current output to alarm mode and display shows “ERR” -status.
- Cs > high_limit: The consistency is higher than defined high limit.
- Cs < low limit: The consistency is lower than defined low limit.
- Pr.eeprom empty (Probe eeprom empty): The eddy probes temperature coefficient memory is empty. In this case temperature compensation is not used.
- Pr.eeprom error (Probe eeprom error): The eddy probes temperature compensation reading failed. In this case temperature compensation is not used.
- Temp_sensor_error: Temperature measuring failed. In this case temperature compensation is not used.
- Temp_too_high: Measured temperature is too high (over 100 °C, 212 °F). In this case temperature compensation is not used.
- Temp_too_low: Measured temperature is too low (below 0 °C, 0 °F). In this case temperature compensation is not used.
- Weight errors: Weight setup must be done. Alarm sets the current output to alarm mode and display shows “ERR” -status.
- Temp inaccurate: Temperature sensor has lost trim values and is using default values. Temperature measurement accuracy is $\pm$ 2 °C instead of $\pm$ 0.1 °C. Does not have noticeable effect on performance.

KC/3 has several error messages which are explained below.

Table 6.1. Error messages.

Error message	Possible reason
Invalid samples	Lab result isn’t given.
	Consistency variable more than 1 Cs % during sampling.
	Less than 3 sample.
Slope too high	Calculated slope is bigger than 19.99. Result will be discarded.
Empty	No alarms.
RS-485 not connected	Serial communication between the display and sensor is not connected, or is not working.

Reset to factory default values:

The user can reload the default values of the S (Slope) and Z (Offset) for all pulp grades. Default values are shown in the table 5.1. The other parameters returned to factory set-up are: the original blade type, output filtering, and local grade selection mode. Grade names will be changed to defaults of the chosen language.

6.2. KC/3 Block diagram

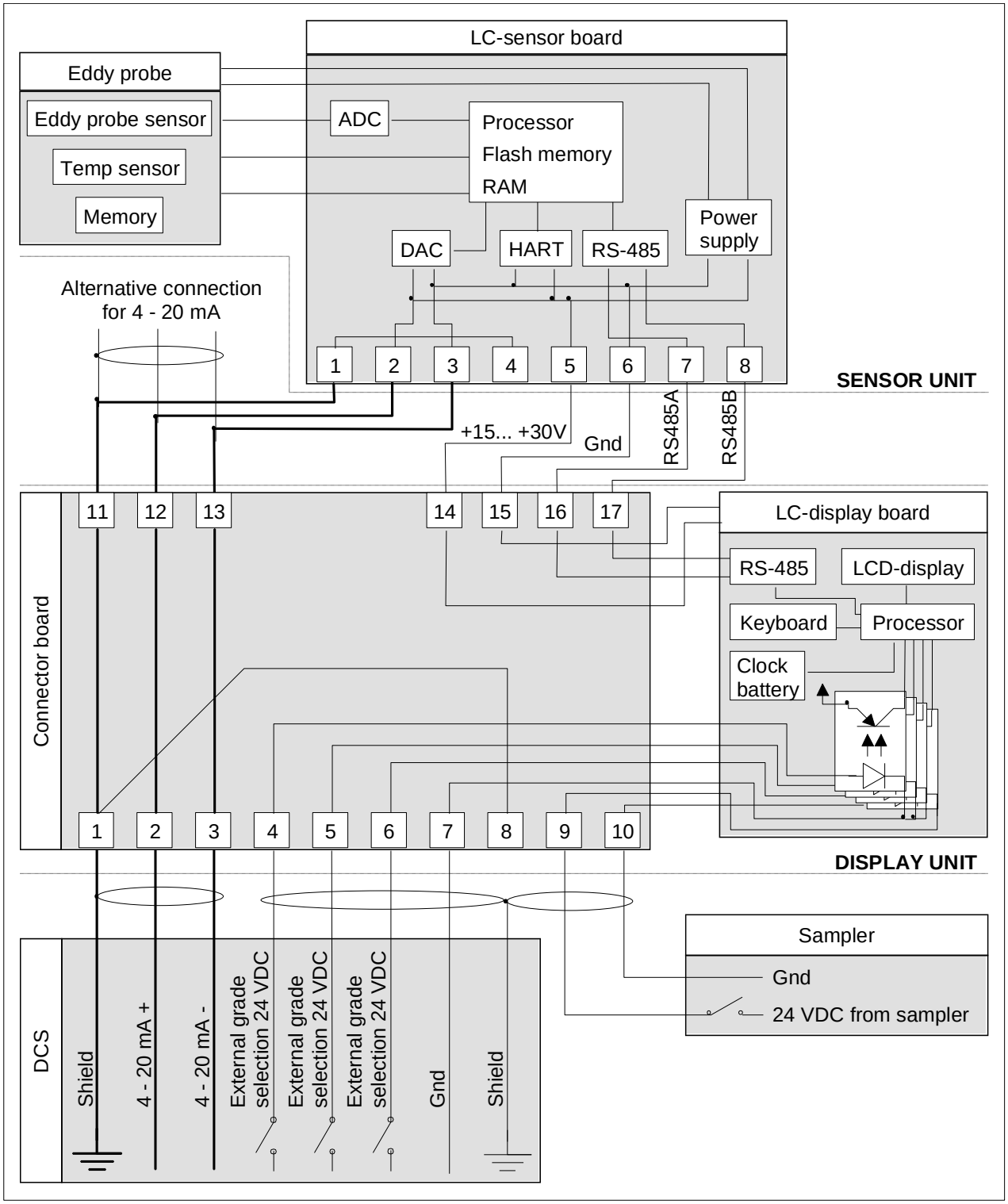

Figure 6.1. KC/3 block diagram.

6.3. Testing and tuning instructions

This chapter presents the service and bench calibration of KC/3 consistency transmitter, weight calibration and final testing. This procedure must be done if some component of sensor unit is changed, and it is also recommended to do once per year to eliminate possible drifting of electronics.

6.3.1. Preparation

1. Connect interconnect cable between the sensor unit and the display unit (See figure 6.2).
2. Connect 15 – 48 V power feed to the display unit terminals 2 and 3.
3. Fix the sensor on stand so that blade is facing down and weight can be hooked on.

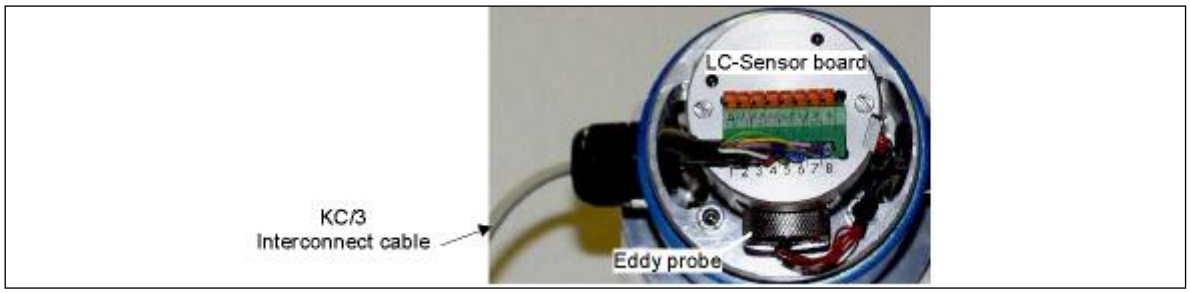

Figure 6.2. Front view of the sensor unit.

6.3.2. Tuning of eddy probe, and adjustment of set screw and zero stop screw

Eddy probe, set screw and zero stop screw are locked with locking screws at the factory. To adjust them the locking screws have to be loosened (See figure 6.3).

Eddy probe:

Eddy probe position is tuned for proper measurement range by tuning it closer or further from measurement arm.

1. Select "MAINTENANCE → CHECK ON-LINE SIGNALS → RAW/T-RAW" menu and turn **eddy probe** so that "RAW" reading is 11000 ±500.
2. Lock **eddy probe** with **locking screw** and check that raw reading is still in the correct range.

Set screw and zero stop screw:

These screws limits measurement arm movement to protect eddy probe and diaphragm.

1. Turn **set screw** clockwise so that "RAW" reading decreases to level 4500 ±500.
2. Next tighten **zero stop screw** so that "RAW" reading increases to level 5000 ±500.
3. Loose **set screw** four rounds (4 x 360˚) and lock **set screw** and **zero stop screw** by theirs **locking screws**.

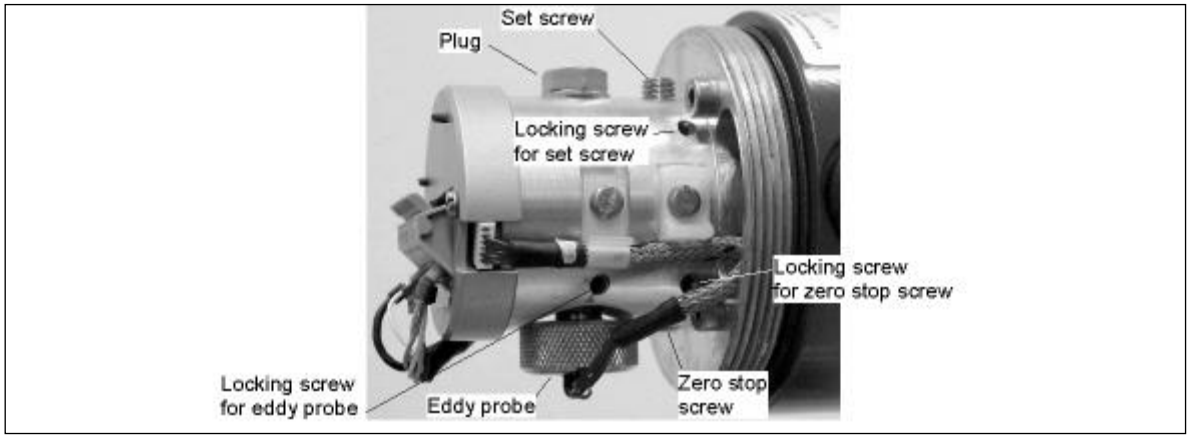

Figure 6.3. Front view of the sensor unit.

6.3.3. Weight set-up

This procedure makes bench calibration to the unit. Ensure that the sensor unit is placed straight to the test bench and it isn't capable to move during test.

Note: Before Weight Setup, check the position adjustment parameter and set it to 0 grams.

Zero tuning:

1. Select "MAINTENANCE → WEIGHT SETUP → ZERO WEIGHT" menu and press "→" button. Display shows "REMOVE WEIGHT FROM BLADE".
2. Press "ENTER" and wait.
3. Display shows "RESULT: xxxxx ENTER CONFIRMS"
4. Press "ENTER" and write down the reading.

Slope tuning:

1. Select "MAINTENANCE → WEIGHT SETUP → SET HIGH GRAM WEIGHT" menu. The weight needed for slope tuning should be any weight between 2000 to 6000 g. Measure weight accurately for example by using laboratory scale. Edit high gram weight corresponding weight that you are using.
2. Set the weight to the blade and stop swinging movement.
3. Select "MAINTENANCE → WEIGHT SETUP → HIGH WEIGHT" menu and press "→" button. Display shows "SET xxxxg WEIGHT TO BLADE".
4. Press "ENTER" and wait.
5. Display shows "RESULT: xxxxx ENTER CONFIRMS".
6. Press "ENTER" and write down the reading.

Appendix 1: KC/3 installation check list

This quick guide leads the way to install, start-up and configure necessary parameters in the normal cases when the binary inputs are not connected.

1. SENSOR UNIT

- ❑ Check that pump and valve axes are parallel (fig. 1).
- ❑ Check that the sensor unit's and the pump's axes are perpendicular to each other (fig. 1).
- ❑ Check that the sampling valve is installed 500 – 1500 mm (20 – 59") after the sensor unit (fig. 1).
- ❑ Check that there is required amount (_____) of straight pipeline before the sensor unit (fig. 1). Normally 3 – 10 x D.
- ❑ Check that there is required amount (_____) of straight pipeline after the sensor unit (fig. 1). Normally 1 – 3 x D.
- ❑ Check that height of the saddle is 22 mm (0.9") for standard blade (fig. 2). Others blades are using 42 mm (1.7").
- ❑ Check that the saddle is welded exactly parallel to process pipe (fig. 2).
- ❑ Check that the protector blades are welded before and after the sensor unit (fig. 2).
- ❑ Check that the protector blades and the sensor are parallel (fig. 2).
- ❑ Mount the sensor unit to the saddle with the enclosed clamp (fig. 3).
- ❑ Check that the sensor blade points to the downstream of the flow (See the label on the sensor) (fig. 2 & 3).
- ❑ Align the sensor blade exactly parallel to the pipe by using the alignment bolts included with the transmitter (fig. 3).
- ❑ Tighten the bolts to a torque of 5.4 kpm (39 lbf-ft).

2. DISPLAY UNIT

- ❑ Install the interconnect cable into the display unit (fig. 4).
- ❑ Install 4 – 20 mA signal cable between DCS and the display unit (fig. 4). The display unit works and KC/3 is ready for configuration.

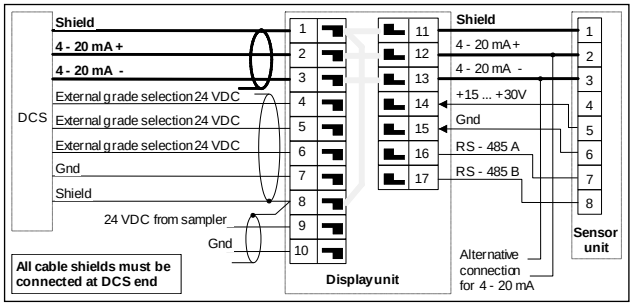

Figure 4. Wiring diagram.

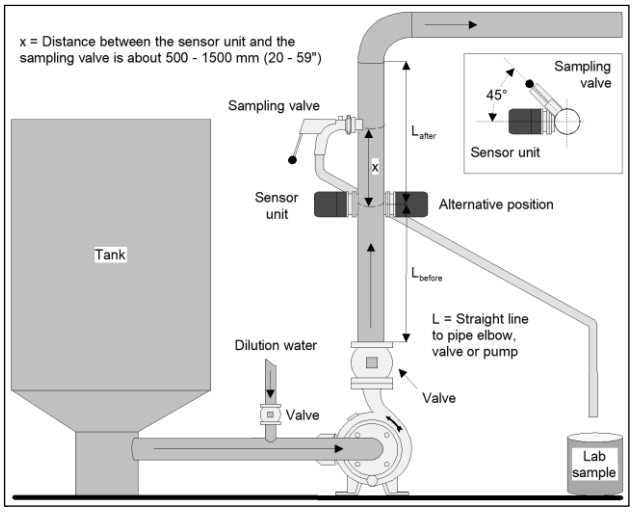

Figure 1. Installation in the vertical pipe.

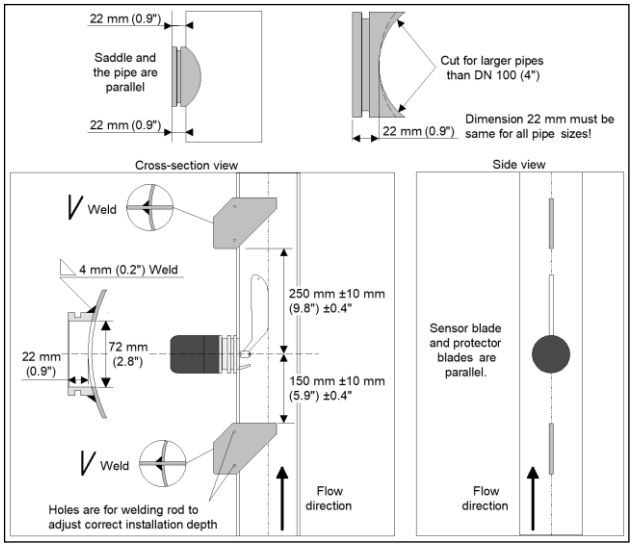

Figure 2. Mounting of the saddle and protector blades.

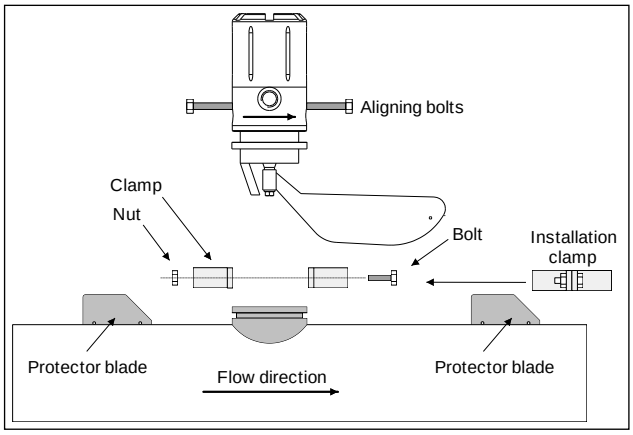

Figure 3. Installation of the sensor unit.

3. SET-UP

Make the following set-ups (See fig. 5):

- ❑ Select measured pulp grade
- ❑ Set low limit of the measurement span
- ❑ Set high limit of the measurement span
- ❑ Select output filtering
- ❑ Set date and time
- ❑ Select grade selection mode
- ❑ Select desired language
- ❑ Select the blade that correspond installation
- ❑ Select desired function in case of error
- ❑ Do position adjustment (IMPORTANT)

Position adjustment is done after process has stabilized and in normal process consistency. Enter consistency value (estimated) to the sensor and it adjusts measurement signal at right level. Take laboratory sample to confirm consistency and You can later on edit before entered estimated consistency value. Position adjustment is done only once during start-up.

- ❑ Set password, 000 means no password asked.

4. CALIBRATION

Take one laboratory sample and change Z (offset) correspondingly. Offset's unit is percent of consistency (fig. 6).

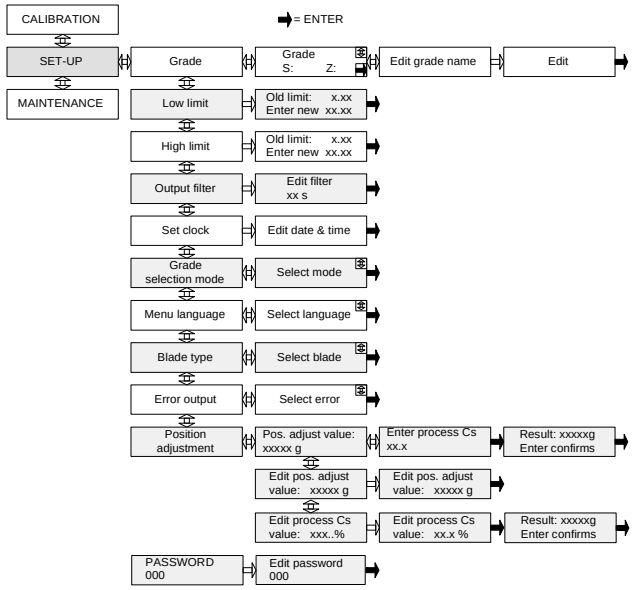

Figure 5. Set-up menu.

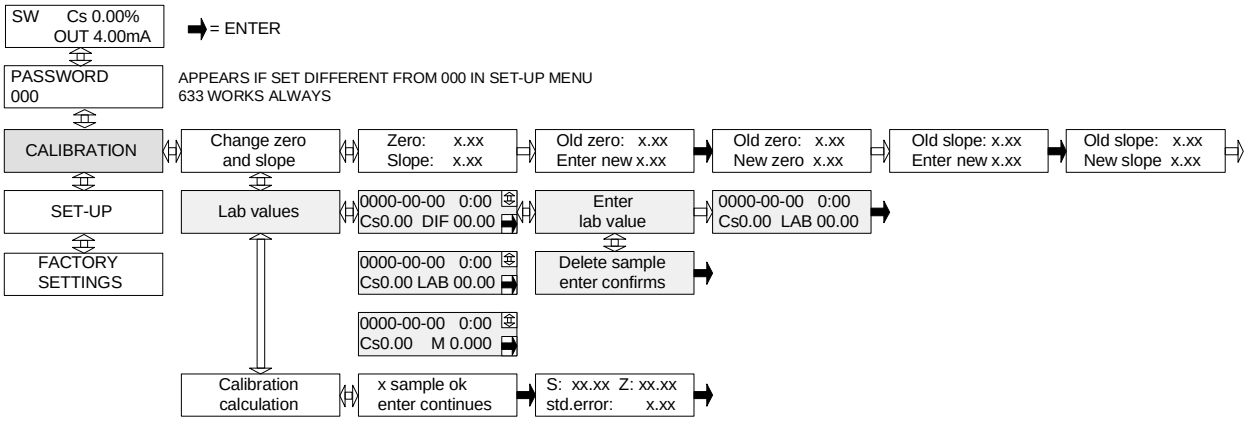

Figure 6. Calibration menu.

Appendix 2: Installation drawings

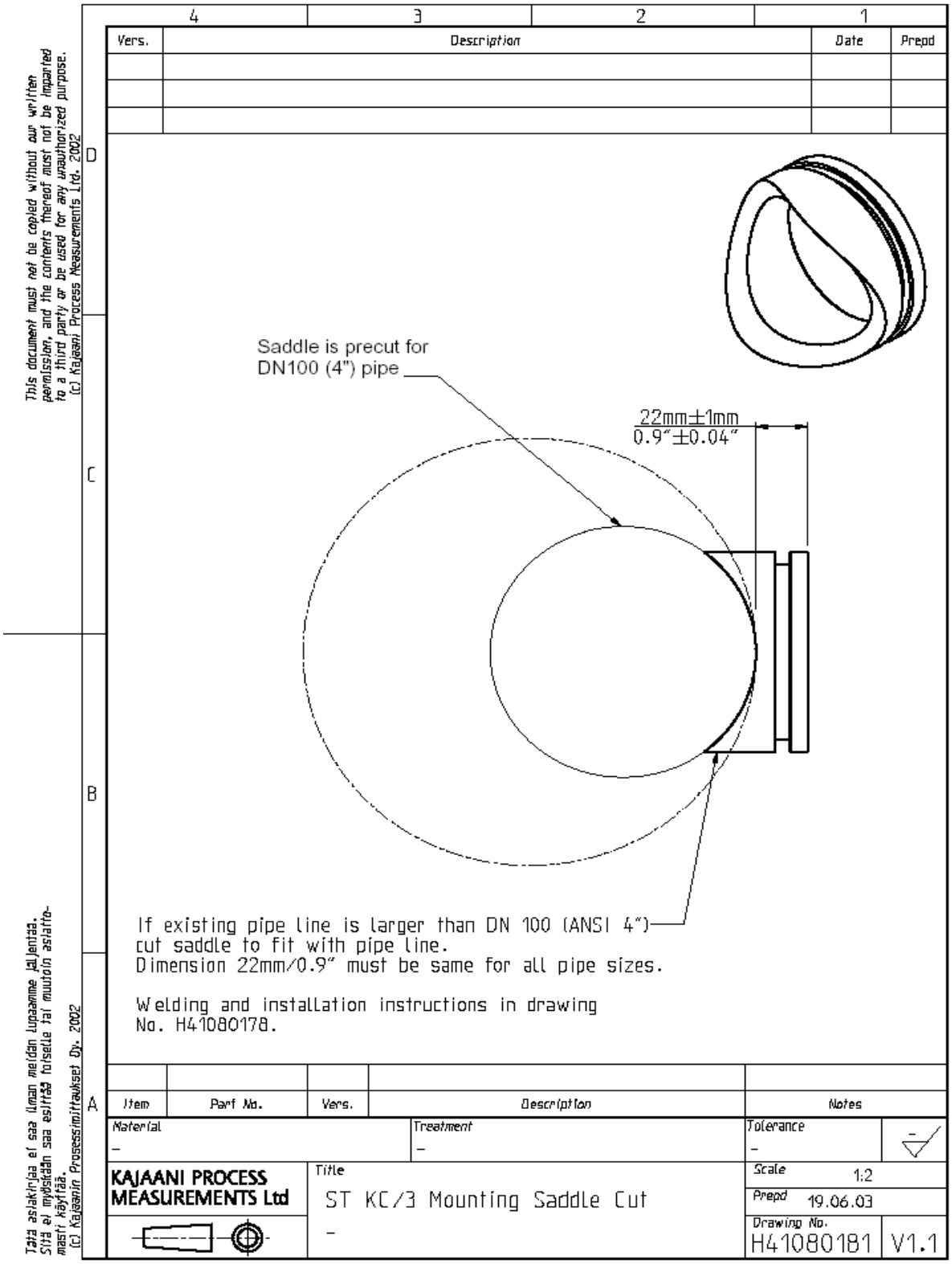

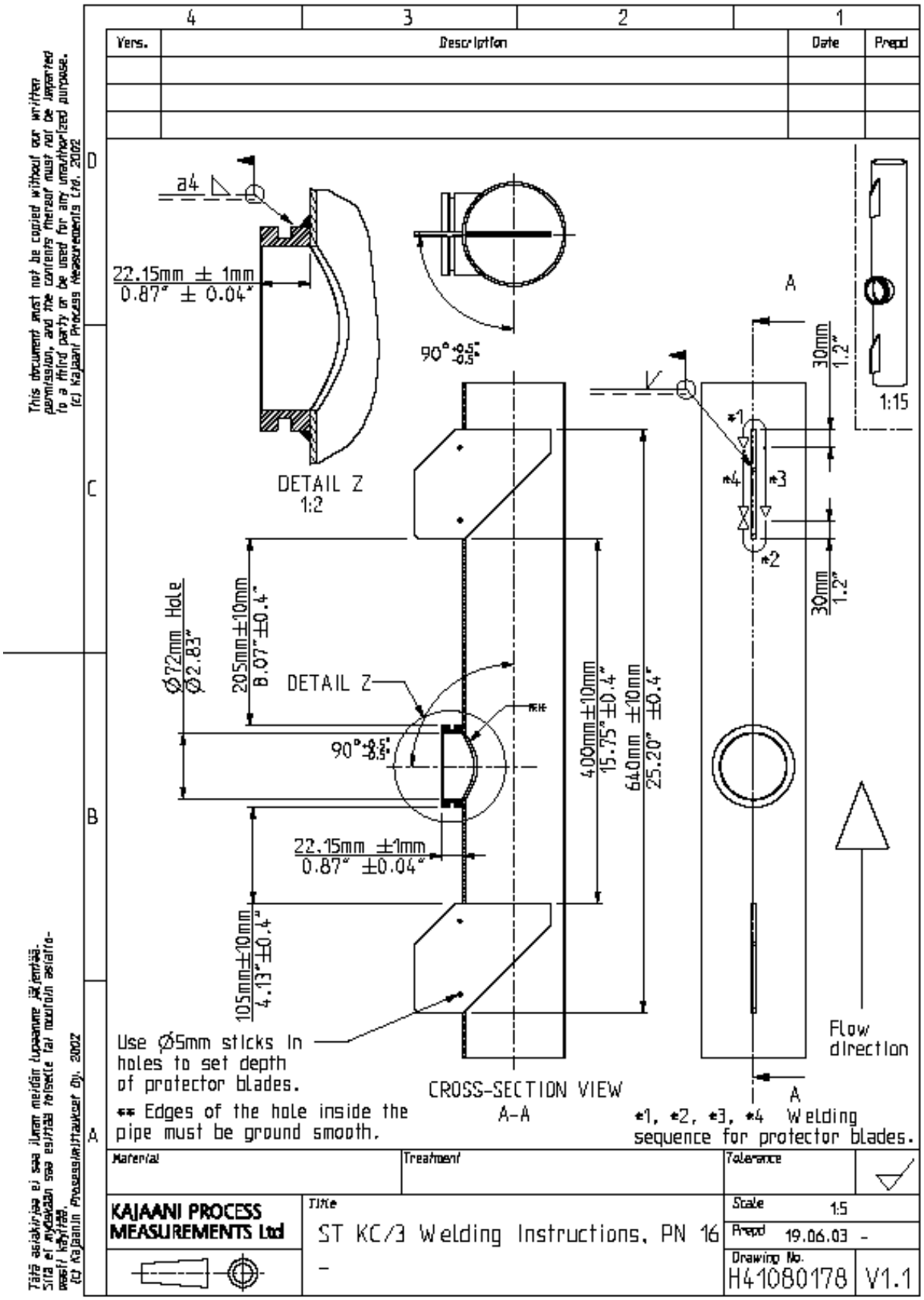
4
3
2
1
Vers.
Description
Date
Prepd
This document must not be copied without our written permission, and the contents thereof must not be imparted to a third party or be used for any unauthorized purpose. (c) Kajaani Process Measurements Ltd. 2002
a4
22.15mm ± 1mm
0.87" ± 0.04"
90° +0.5 -0.5
DETAIL Z
1:2
A
30mm
1.2"
1:15
*1
*4
*3
*2
Ø72mm Hole
Ø2.83"
205mm±10mm
8.07" ±0.4"
DETAIL Z
**
90° +0.5 -0.5
400mm±10mm
15.75" ±0.4"
640mm ±10mm
25.20" ±0.4"
22.15mm ±1mm
0.87" ±0.04"
105mm±10mm
4.13" ±0.4"
Use Ø5mm sticks in holes to set depth of protector blades.
** Edges of the hole inside the pipe must be ground smooth.
CROSS-SECTION VIEW
A-A
Flow direction
*1, *2, *3, *4 Welding sequence for protector blades.
Material
Treatment
Tolerance
KAJAANI PROCESS MEASUREMENTS Ltd
Title
ST KC/3 Welding Instructions, PN 16
-
Scale 1:5
Prepd 19.06.03 -
Drawing No.
H41080178
V1.1
Tätä asiakirjaa ei saa jäljentää tai muutoin asiattomasti käyttää. (c) Kajaanin Prosessimittaukset Oy. 2002

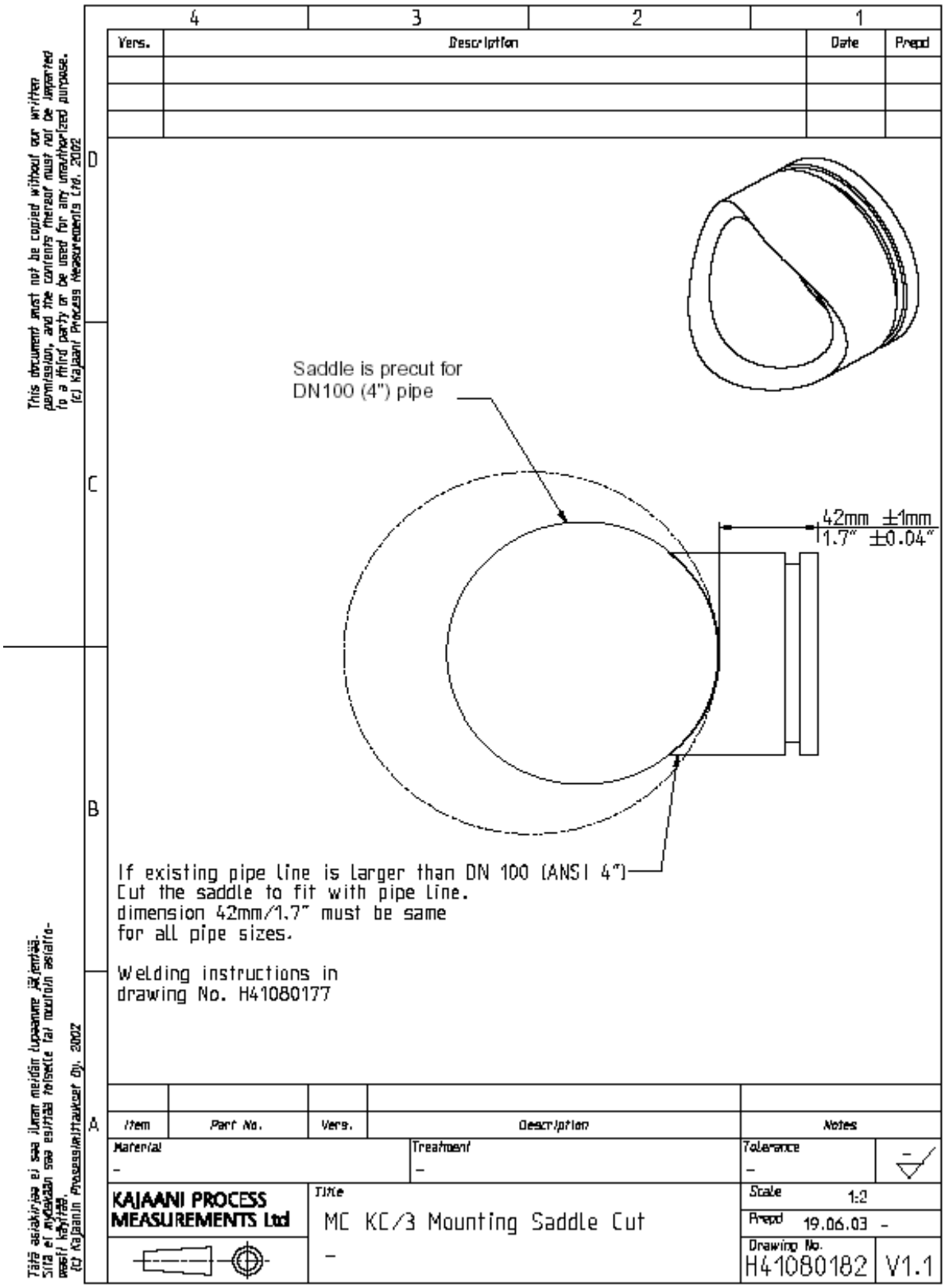

4
3
2
1
Vers.
Description
Date
Prepd
D
C
B
A
Saddle is precut for
DN100 (4") pipe
42mm ±1mm
1.7" ±0.04"
If existing pipe line is larger than DN 100 (ANSI 4")
Cut the saddle to fit with pipe line.
dimension 42mm/1.7" must be same
for all pipe sizes.
Welding instructions in
drawing No. H41080177
Item
Part No.
Vers.
Description
Notes
Material
-
Treatment
-
Tolerance
-
KAJAANI PROCESS
MEASUREMENTS Ltd
Title
MC KC/3 Mounting Saddle Cut
-
Scale
1:2
Prepd
19.06.03
-
Drawing No.
H41080182
V1.1
This document must not be copied without our written permission, and the contents thereof must not be imparted to a third party or be used for any unauthorized purpose.
(c) Kajaani Process Measurements Ltd. 2002
Tätä asiakirjaa ei saa ilman meidän lupaamme jäljentää. Sitä ei mydskään saa esittää toisille tai muutoin asiattomasti käyttää.
(c) Kajaanin Prosessimittaukset Oy. 2002

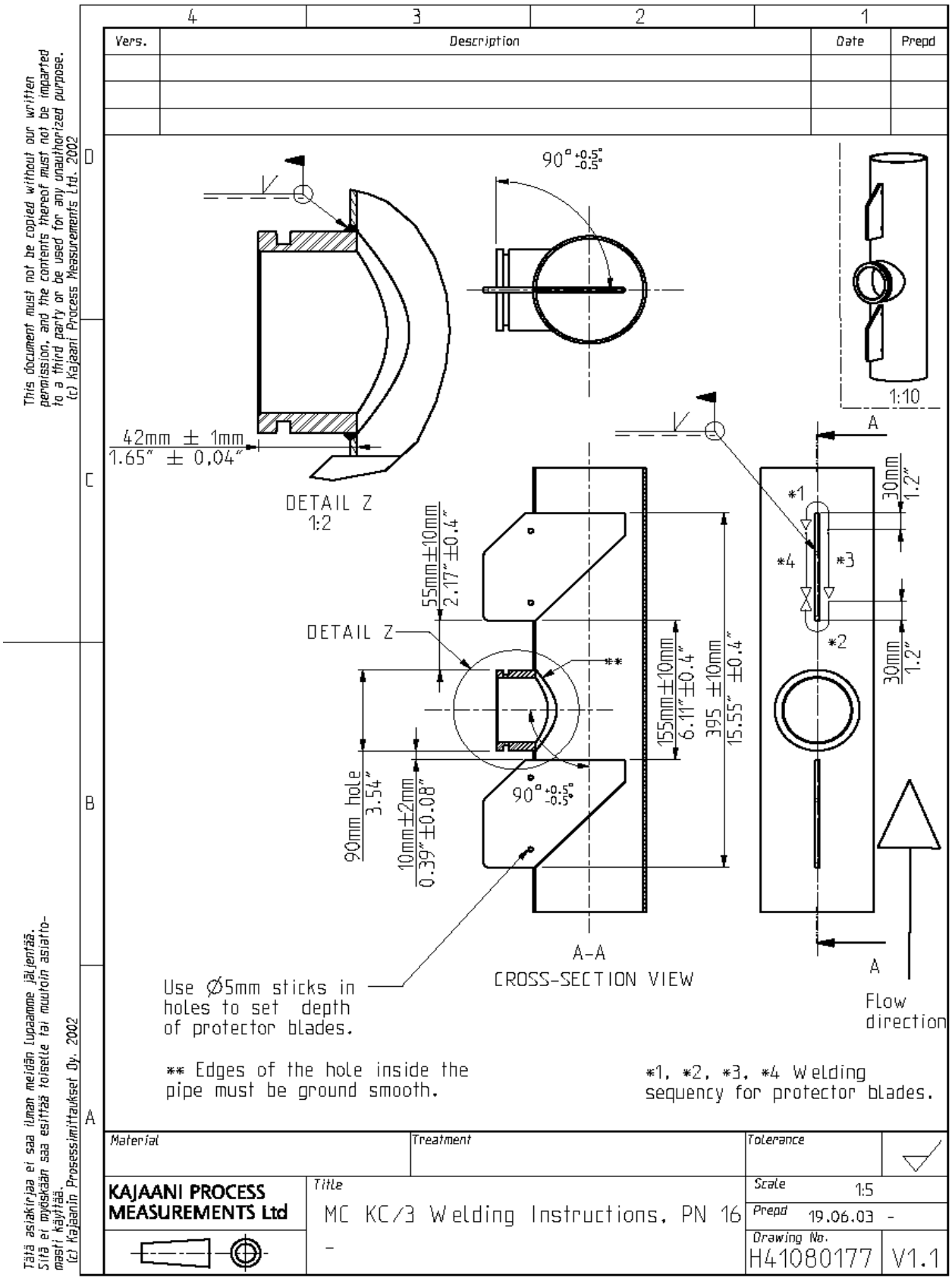
4
3
2
1
Vers.
Description
Date
Prepd
This document must not be copied without our written permission, and the contents thereof must not be imparted to a third party or be used for any unauthorized purpose. (c) Kajaani Process Measurements Ltd. 2002
90° +0.5° -0.5°
1:10
42mm ± 1mm
1.65" ± 0,04"
DETAIL Z
1:2
55mm±10mm
2.17"±0.4"
DETAIL Z
**
155mm±10mm
6.11"±0.4"
395 ±10mm
15.55" ±0.4"
90mm hole
3.54"
10mm±2mm
0.39"±0.08"
90° +0.5° -0.5°
A-A
CROSS-SECTION VIEW
*1
*2
*3
*4
30mm
1.2"
30mm
1.2"
A
A
Flow direction
Use Ø5mm sticks in holes to set depth of protector blades.
** Edges of the hole inside the pipe must be ground smooth.
*1, *2, *3, *4 Welding sequency for protector blades.
Material
Treatment
Tolerance
KAJAANI PROCESS MEASUREMENTS Ltd
Title
MC KC/3 Welding Instructions, PN 16
-
Scale 1:5
Prepd 19.06.03 -
Drawing No.
H41080177
V1.1
Tätä asiakirjaa ei saa ilman meidän lupaamme jäljentää. Sitä ei myöskään saa esittää toiselle tai muutoin asiattomasti käyttää. (c) Kajaanin Prosessimittaukset Oy. 2002

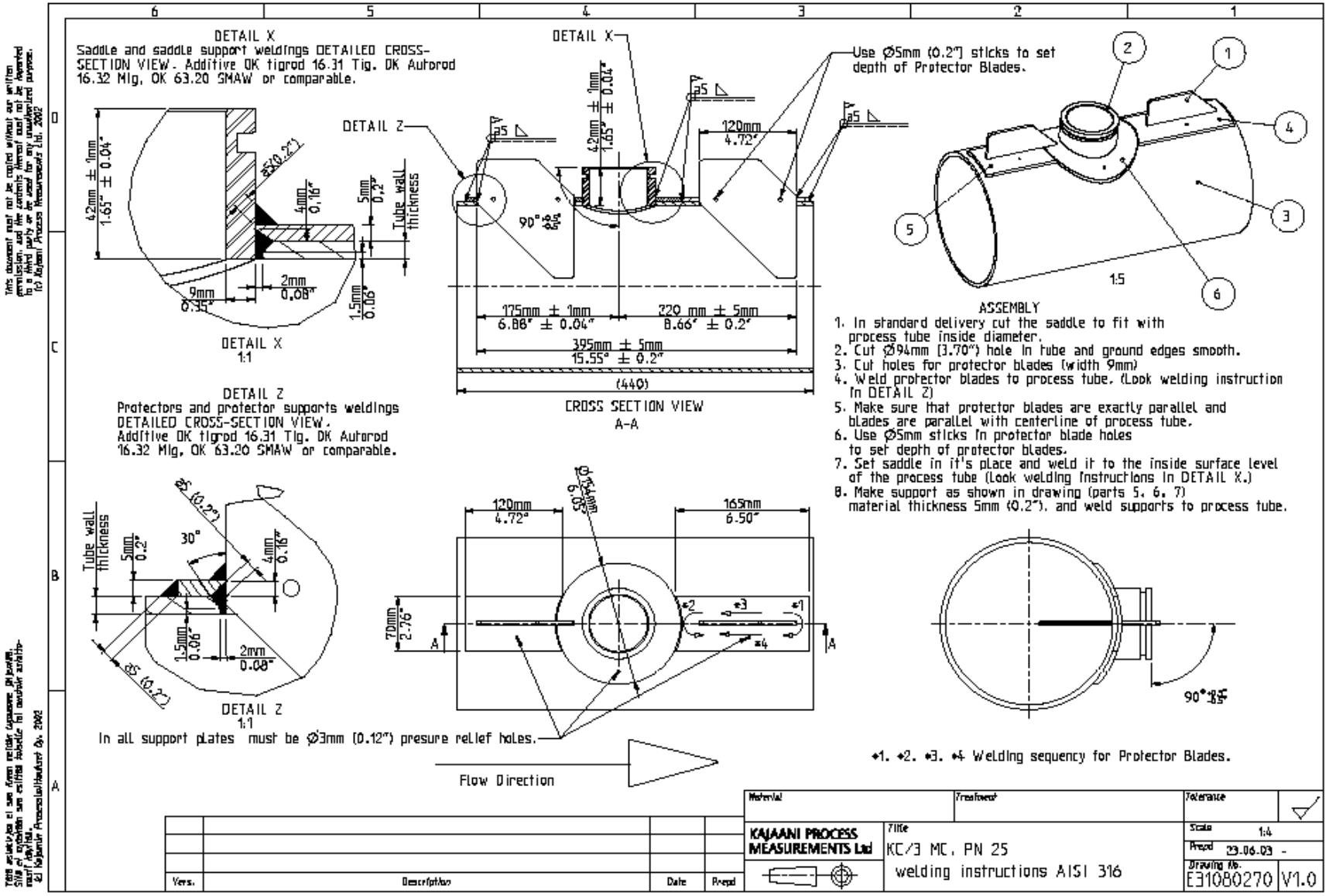
DETAIL X
Saddle and saddle support weldings DETAILED CROSS-SECTION VIEW. Additive OK tigrod 16.31 Tig. OK Autorod 16.32 Mig, OK 63.20 SMAW or comparable.
DETAIL X
1:1
DETAIL Z
Protectors and protector supports weldings DETAILED CROSS-SECTION VIEW. Additive OK tigrod 16.31 Tig. OK Autorod 16.32 Mig, OK 63.20 SMAW or comparable.
DETAIL Z
1:1
DETAIL X
DETAIL Z
CROSS SECTION VIEW
A-A
Use Ø5mm (0.2") sticks to set depth of Protector Blades.
1:5
ASSEMBLY
1. In standard delivery cut the saddle to fit with process tube inside diameter.
2. Cut Ø94mm (3.70") hole in tube and ground edges smooth.
3. Cut holes for protector blades (width 9mm)
4. Weld protector blades to process tube. (Look welding instruction in DETAIL Z)
5. Make sure that protector blades are exactly parallel and blades are parallel with centerline of process tube.
6. Use Ø5mm sticks in protector blade holes to set depth of protector blades.
7. Set saddle in it's place and weld it to the inside surface level of the process tube (Look welding instructions in DETAIL X.)
8. Make support as shown in drawing (parts 5, 6, 7) material thickness 5mm (0.2"), and weld supports to process tube.
In all support plates must be Ø3mm (0.12") presure relief holes.
Flow Direction
•1. •2. •3. •4 Welding sequency for Protector Blades.
KAJAANI PROCESS MEASUREMENTS Ltd
KC/3 MC, PN 25
welding instructions AISI 316
E31080270
V1.0

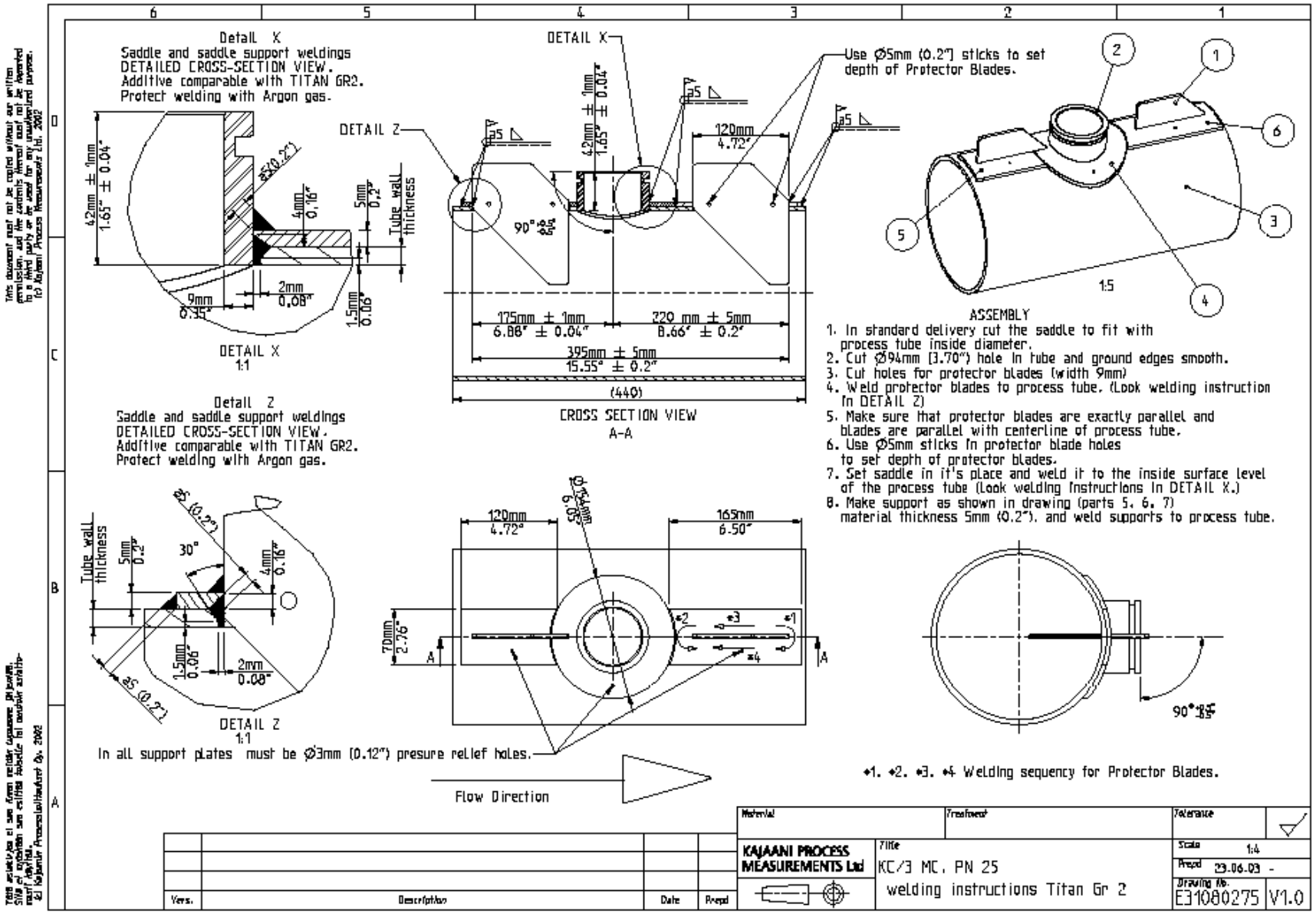
Detail X
Saddle and saddle support weldings
DETAILED CROSS-SECTION VIEW.
Additive comparable with TITAN GR2.
Protect welding with Argon gas.
DETAIL X
1:1
DETAIL X
DETAIL Z
Use Ø5mm (0.2") sticks to set depth of Protector Blades.
CROSS SECTION VIEW
A-A
1:5
ASSEMBLY
1. In standard delivery cut the saddle to fit with process tube inside diameter.
2. Cut Ø94mm (3.70") hole in tube and ground edges smooth.
3. Cut holes for protector blades (width 9mm)
4. Weld protector blades to process tube. (Look welding instruction in DETAIL Z)
5. Make sure that protector blades are exactly parallel and blades are parallel with centerline of process tube.
6. Use Ø5mm sticks in protector blade holes to set depth of protector blades.
7. Set saddle in it's place and weld it to the inside surface level of the process tube (Look welding instructions in DETAIL X.)
8. Make support as shown in drawing (parts 5. 6. 7) material thickness 5mm (0.2"). and weld supports to process tube.
Detail Z
Saddle and saddle support weldings
DETAILED CROSS-SECTION VIEW.
Additive comparable with TITAN GR2.
Protect welding with Argon gas.
DETAIL Z
1:1
In all support plates must be Ø3mm (0.12") presure relief holes.
Flow Direction
•1. •2. •3. •4 Welding sequency for Protector Blades.
KAJAANI PROCESS MEASUREMENTS Ltd
KC/3 MC, PN 25
welding instructions Titan Gr 2
E31080275
V1.0

Appendix 3: Weight-Consistency matrix with default S and Z

Grams	SW Cs%			HW Cs%			TMP Cs%			CTMP Cs%			GW Cs%			RECYCLED Cs%			EUCALYPTUS Cs%		
	ST	MC Medium	C Blade Low Cs	ST	MC Medium	C Blade Low Cs	ST	MC Medium	C Blade Low Cs	ST	MC Medium	C Blade Low Cs	ST	MC Medium	C Blade Low Cs	ST	MC Medium	C Blade Low Cs	ST	MC Medium	C Blade Low Cs
	S=2,1 Z=-8	S=2,5 Z=-6,5	S=1,0 Z=-1,2	S=1,8 Z=-5,5	S=2,2 Z=-5,2	S=1,4 Z=-4,0	S=2,2 Z=-7	S=1,4 Z=-3,1	S=1,0 Z=-2,4	S=2,2 Z=-7	S=1,4 Z=-3,1	S=1,0 Z=-2,4	S=2,4 Z=-10	S=1,6 Z=-4	S=1,2 Z=-2,7	S=1,8 Z=-6,7	S=1,9 Z=-4,5	S=1,4 Z=-5,0	S=2,3 Z=-9	S=2,2 Z=-5,2	S=1,5 Z=-4,3
10																					
20			1,8																		
50			2,7	1,5		1,5	1,6		1,5	1,6		1,5			2,0						1,6
75			3,1	2,3		2,0	2,5		1,9	2,5		1,9			2,5						2,2
100	1,7		3,4	2,8		2,4	3,1		2,2	3,1		2,2	1,1		2,8	1,6		1,4	1,6		2,6
150	2,5		3,8	3,5		3,0	4,0		2,6	4,0		2,6	2,0		3,3	2,3		2,0	2,5	5,8	3,2
200	3,1	6,7	4,1	4,0		3,4	4,7		2,9	4,7		2,9	2,7		3,7	2,8	5,6	2,4	3,2	6,5	3,6
250	3,6	7,3	4,3	4,4	6,9	3,7	5,1		3,1	5,1		3,1	3,3		3,9	3,2	6,0	2,7	3,7	6,9	4,0
300	4,0	7,8	4,5	4,8	7,3	4,0	5,5		3,3	5,5		3,3	3,7		4,1	3,6	6,3	3,0	4,1	7,3	4,3
350	4,3	8,1	4,7	5,0	7,7	4,2	5,9		3,5	5,9		3,5	4,1		4,3	3,8	6,6	3,2	4,5	7,7	4,5
400	4,6	8,5	4,8	5,3	8,0	4,4	6,2		3,6	6,2		3,6	4,4	5,6	4,5	4,1	6,9	3,4	4,8	8,0	4,7
450	4,8	8,8	4,9	5,5	8,2	4,6	6,4	5,5	3,7	6,4	5,5	3,7	4,7	5,8	4,6	4,3	7,1	3,6	5,1	8,2	4,9
500	5,1	9,0	5,0	5,7	8,5	4,7	6,7	5,6	3,8	6,7	5,6	3,8	4,9	5,9	4,8	4,5	7,3	3,7	5,3	8,5	5,0
600	5,4	9,5	5,2	6,0	8,9	5,0	7,1	5,9	4,0	7,1	5,9	4,0	5,4	6,2	5,0	4,8	7,7	4,0	5,7	8,9	5,3
700	5,8	9,9	5,4	6,3	9,2	5,2	7,4	6,1	4,2	7,4	6,1	4,2	5,7	6,5	5,2	5,1	7,9	4,2	6,1	9,2	5,5
800	6,0	10,2	5,5	6,5	9,5	5,4	7,7	6,3	4,3	7,7	6,3	4,3	6,0	6,7	5,3	5,3	8,2	4,4	6,4	9,5	5,7
900	6,3	10,5	5,6	6,7	9,8	5,5	8,0	6,4	4,4	8,0	6,4	4,4	6,3	6,9	5,5	5,5	8,4	4,5	6,6	9,8	5,9
1000	6,5	10,8	5,7	6,9	10,0	5,7		6,6	4,5		6,6	4,5	6,6	7,1	5,6	5,7	8,6	4,7	6,9	10,0	6,1
1200	6,9	11,2	5,9	7,3	10,4	5,9		6,8	4,7		6,8	4,7	7,0	7,3	5,8	6,1	9,0	4,9	7,3	10,4	
1400	7,2	11,6		7,5	10,7			7,0	4,8		7,0	4,8	7,4	7,6	6,0	6,3	9,3	5,1	7,7	10,7	
1600	7,5	11,9		7,8	11,0			7,2	5,0		7,2	5,0	7,7	7,8		6,6	9,5	5,3	8,0	11,0	
1800	7,7	12,2		8,0	11,3			7,4	5,1		7,4	5,1	8,0	8,0		6,8	9,7	5,5		11,3	
2000	8,0	12,5			11,5			7,5	5,2		7,5	5,2		8,2		7,0	9,9	5,6		11,5	
2500		13,1			12,0			7,9	5,4		7,9	5,4		8,5		7,4	10,4	6,0		12,0	
3000		13,5			12,4			8,1	5,6		8,1	5,6		8,8		7,7	10,7			12,4	
3500		13,9			12,8			8,3			8,3			9,1		8,0	11,0			12,8	

Appendix 4: Explosion drawings

KC/3 Blade Consistency Transmitter, Ti (A41080045 V1.0)

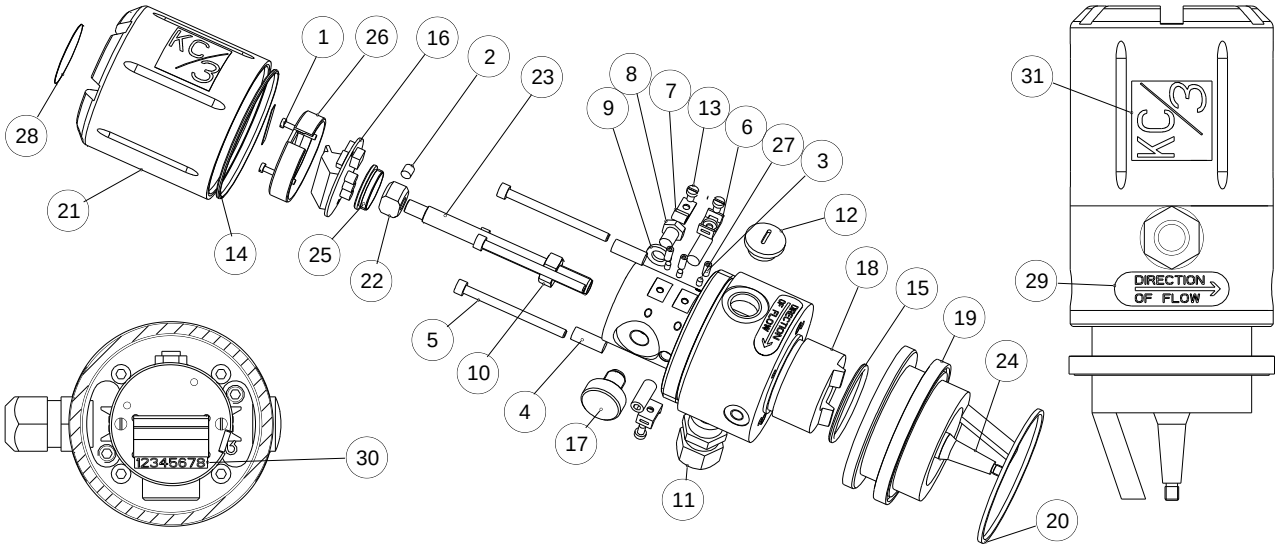

Item	Part number	Description	Value device code	Quantity
1	2000171	Screw	M3x20 DIN 7985 A4	2 pcs
2	2000018	Screw	M6x6 DIN 916 A4	1 pcs
3	2000019	Screw	M4x8 DIN 913 A4	3 pcs
4	2000020	Screw	M8x20 DIN 916 A4	4 pcs
5	2000023	Screw	M5x65 DIN 912 A4	4 pcs
6	2000024	Flat Tie Holder	Richco FTH 13R-01	2 pcs
7	2000025	Wire Harness Clip	Richco WHC-125-01	1 pcs
8	2000057	Screw	M8x10 DIN 933 A4	1 pcs
9	2000058	Washer	8.4 DIN 125 A4	1 pcs
10	2000059	Hex Nut	M10 x 1 DIN 934 Zn	1 pcs
11	2000065	Cable Bushing	M20 X 1.5 Black	1 pcs
12	2000066	Locking Plug	M20x1.5 Black	1 pcs
13	2000172	Screw	M4x6 DIN 7985 A4	3 pcs
14	2700020	O-ring	O-Ring 69,52x2,52 EPDM	1 pcs
15	2700021	O-ring	O-ring 44,2x3 EPDM	1 pcs
16	A41080006 V3.21	LC Sensor Board		1 pcs
17	A41080083 V1.1	Eddy Probe		1 pcs
18	H31080150 V1.3	Body		1 pcs
19	H31080153 V1.2	Lower Body		1 pcs
20	H41010046 V1.0	Gasket		1 pcs
21	H41080149 V1.0	Cover Cup		1 pcs
22	H41080152 V1.1	Measurement Ring		1 pcs
23	H41080154 V1.0	Arm		1 pcs
24	H41080155 V1.1	Probe Shaft		1 pcs
25	H41080157 V1.0	Plug		1 pcs
26	H41080159 V1.0	Cover		1 pcs
27	H41080162 V1.0	Press Plug		3 pcs
28	T41080076 V1.0	KC3 Warnig Label		1 pcs
29	T41080077 V1.0	KC3 Direction of Flow		2 pcs
30	T41080080 V1.0	Number Label 1-8		1 pcs
31	T41080086 V1.0	KC3 Sensor Front Label		2 pcs

KC/3 Standard Blade Transmitter Ti (A41080064 V1.1)

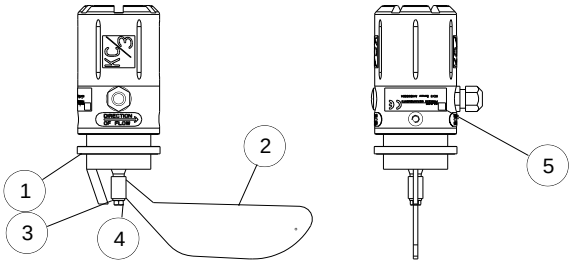

Item	Part number	Description	Value device code	Quantity
1	A41080045 V1.0	KC/3 Blade Consistency Transmitter		1 pcs
2	H41080156 V1.0	ST titanium blade 2-8 %Cs		1 pcs
	H41080165 V1.0	MC titanium blade 6-16 %C		1 pcs
	H41080048 V1.0	ST SS316 blade 2-8 %Cs		1 pcs
	H41080049 V1.0	MC SS316 blade 6-16 %Cs		1 pcs
	H41080170 V1.0	RU SS316 blade 2-8 %Cs		1 pcs
3	H41080160 V1.0	Titan Washer		1 pcs
	2000083	M6 DIN 125 A4, Washer		1 pcs
4	H41080161 V1.0	Titan Nut M6		1 pcs
	2000064	Hex nut M6 AISI316		1 pcs
5	T41080087 V1.0	KC/3 Sensor Label		1 pcs
6	A41080085 V1.0	KC/3 Interconnect cable	10 m (33')	1 pcs

Electronics Base Assembly (A41080175 V1.0)

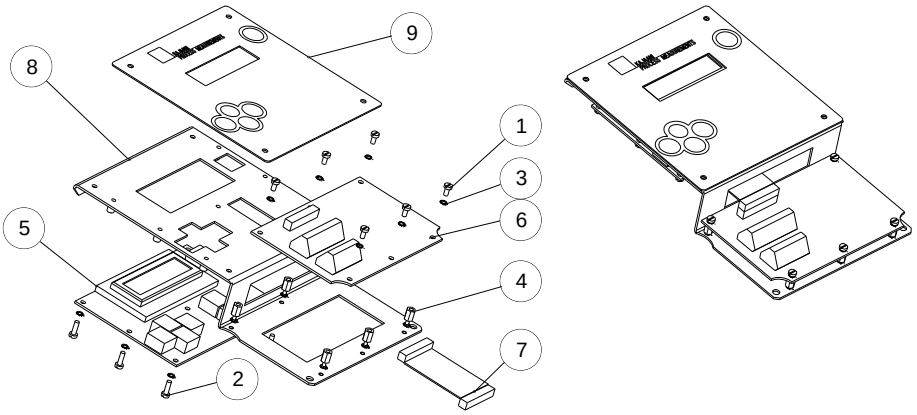

Item	Part number	Description	Value device code	Quantity
1	200005	Screw	M3x6 DIN 84 A4	6 pcs
2	200008	Screw	M3x10 DIN 84 A4	7 pcs
3	200013	Serrated lock washer	M3 DIN 6798A A4	19 pcs
4	200014	Screw, Standoff screw	M3x8+3x4 Zn	6 pcs
5	A41080023 V3.0	LC Display Board		1 pcs
6	A41080033 V2.0	LC Connector Board		1 pcs
7	A41080063 V1.0	Display Cable		1 pcs
8	H31080142 V1.1	Base		1 pcs
9	T41080079 V1.1	Display Cover Label		1 pcs
10	1960002	Clock battery		1 pcs

Housing Assembly (A41080173 V1.0)

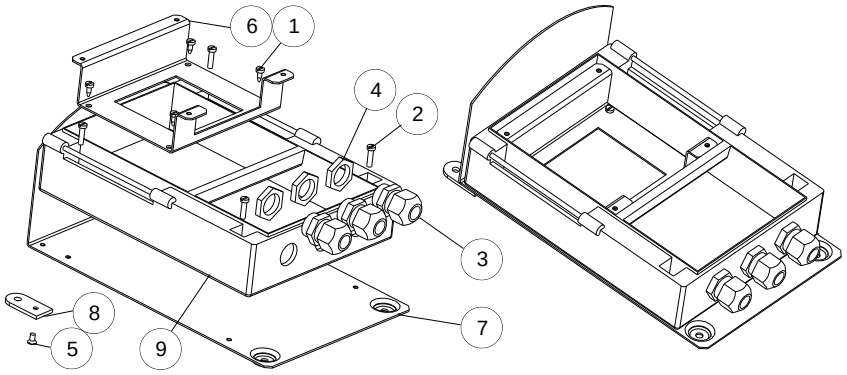

Item	Part number	Description	Value device code	Quantity
1	2000010	Screw	3.5 - 9.5 DIN 7981 Zn	4 pcs
2	2000011	Screw	M4x16 DIN 84 A4	4 pcs
3	2000054	Cable Bushing	M20 x 1.5 Grey	3 pcs
4	2000055	Cable Bushing Nut	M20 x 1.5 Grey	3 pcs
5	2000056	Slotted flat head screw	M4x8 AISI316 DIN 963	2 pcs
6	H41080141 V1.0	Support		1 pcs
7	H41080143 V1.1	Backboard		1 pcs
8	H41080171 V1.0	Ear		2 pcs
9	H41080172 V1.0	Plastic Housing Base		1 pcs

KC/3 Display Unit (A41080046 V1.1)

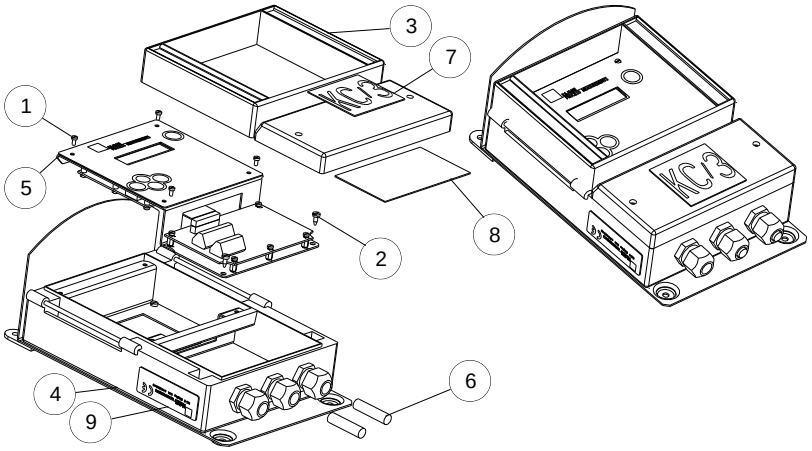

Item	Part number	Description	Value device code	Quantity
1	2000005	Screw	M3x6 DIN 84 A4	4 pcs
2	2000010	Screw	3.5 - 9.5 DIN 7981 Zn	2 pcs
3	2850002	Plastic Housing Cover	Bopla FD 5000 G	1 pcs
4	A41080173 V1.0	Housing Assembly		1 pcs
5	A41080175 V1.0	Electronics Base Assembly		1 pcs
6	H41080174 V1.0	Plug		2 pcs
7	T41080078 V1.0	KC/3 Display Front Label		1 pcs
8	T41080082 V1.0	Connections Label		1 pcs
9	T41080088 V1.0	Display Unit Device Label		1 pcs

Appendix 5: KC/3 Spare parts kits

KC/3 Spare parts		
Order Code	**Note**	**Description**
A41080023V3.0	r	LC Display Board
A41080006V3.21	r	LC Sensor Board
A41080083V1.1	r	Eddy Probe
H41010046V1.0	r	Gasket for saddle
H41080160V1.0	r	Titan Washer A6
H41080161V1.0	r	Titan Nut M6
H41010048V1.0	r	Blind flange AISI316
1960002	r	Lithium battery CR2032
A41080033V3.0	c	LC Connector Board
H41080153V1.2	c	Lower Body
H41080154V1.0	c	Arm
H41080156V1.0	c	ST titanium blade 2-8%Cs
A41080285V1.0	c	KC/3 Calibration Bench
A41080208V1.0	c	KC/3 Blade adjustment tool
A41080246V1.0	c	KC/3 Blade puller
A41080096V1.0	r	**KC/3 Recommended Spare Part Kit**
A41080095V1.1	r+c	**KC/3 Complete Spare Part Kit (includes Recommended Spares)**

Appendix 6: KC/3 Model selection table

Type K	C	3	Order Code				Description
K	C	3					**KC/3 Blade Type Consistency Transmitter without blade**
							KC/3 Display Unit
							Sensor Wetted Parts Materials
			T				Titanium,standard - all wetted parts titanium (Sensor and Blade)
			S				Stainless Steel wetted parts for H2O2-applications
							Damping oil
				N			No damping oil
							Blade Type
					L		2-8%Cs Standard Blade
					C		(1.5)2-6%Cs Low consistency Blade
					R		2-8%Cs Recycled Unscreened Blade (Titanium not available)
					H		6-16%Cs Medium consistency blade
							Mounting material (saddle+gasket+clamps+ 2pcs flow breakers)
						S	SS316L Saddle & protector blades
						T	Titanium Saddle & protector blades
						R	SS316L Saddle & protector blades for Recycled unscreened pulp
						F	Titanium saddle for FRP-pipes
						X	Digester blow-line PN25 SS316 saddle & protector blades
						A	SMO254 saddle & protectors
						N	No mounting material

Example models							Example configurations
K	C	3	T	N	L	S	KC/3 Standard pulp blade 2-8%Cs, SS316 mounting saddle
K	C	3	S	N	L	S	KC/3 Standard pulp blade for H2O2-application Cs 2-8%Cs SS316 materials
K	C	3	T	N	C	S	KC/3 Low consistency blade, especially for 2-3%Cs, SS316 installation parts
K	C	3	S	N	C	S	KC/3 Low consistency blade for H2O2 applications, especially for 2-3%Cs, SS installation parts
K	C	3	S	N	R	R	KC/3 Recycled unscreened pulp blade, SS316 mounting saddle and Unscreened protector Blade
K	C	3	T	N	H	S	KC/3 Medium consistency pulp blade 6-16% Cs (titanium blade), SS316 installation parts
K	C	3	S	N	H	S	KC/3 Medium Consitency Blade for H2O2-application 6-16%Cs, SS316 installation parts
K	C	3	T	N	L	T	KC/3 Standard pulp blade 2-8%Cs, Titanium mounting saddle and protectors
K	C	3	T	N	H	T	KC/3 Medium consistency pulp Blade, Titanium mounting saddle and protectors
K	C	3	T	N	H	X	KC/3 Blow-line mediun consistency PN25, Stainless installation parts
K	C	3	T	N	H	F	KC/3 Medium consistency pulp Blade, Titanium mounting saddle for FRP-pipes

PLEASE SELECT

-sensor wetted parts material

-blade type

-mounting material

TO ORDER CORRECT TRANSMITTER TYPE

Appendix 7: Technical specification

SENSOR TYPE	Blade Consistency Transmitter
OUTPUT SIGNAL	2 -wire, 4 - 20 mA + HART®, FDT/DTM, Foundation Fieldbus and Profibus PA optional
MEASURING RANGE	2 - 8 % with standard blade 6 - 16 % with medium consistency blade 2 - 3 % with Low consistency blade 2 - 8 % with recycled unscreened blade
SENSITIVITY	Better than 0.01 % Cs
PROCESS PRESSURE	Max. 25 bar (363 psi)
PROCESS TEMPERATURE	0 - 120 °C (32 - 212 °F)
AMBIENT TEMPERATURE	0 - 65 °C (32 - 149 °F)
STORAGE TEMPERATURE	-50…+80 °C (-59 - 176 °F)
FLOW VELOCITY	0.5 - 5 m/s (1.6 - 16 ft/s) Standard blade 0.5 - 8 m/s (1.6 - 26 ft/s) Medium consistency blade 0.5 - 5 m/s (1.6 - 16 ft/s) Low consistency blade 0.5 - 5 m/s (1.6 - 16 ft/s) Recycled unscreened blade
WEIGHT	Transmitter 2.3 kg (5.1 lbs), Display unit 2.2 kg (4.9 lbs)
PROCESS CONNECTION	Clamp connection to mounting saddle. Saddle welded onto process pipe. All required hardware included with the transmitter.
PROCESS PIPE SIZE	100 mm (4“) diameter or larger
MATERIALS	All wetted parts titanium or Stainless steel. Mounting gaskets PTFE, Mounting saddle SS316L, SMO, Duplex, Titanium or FRP.
LOW VOLTAGE & EMC	IEC 6100-4-3 and CISPR 11
ENCLOSURE CLASS	Sensor unit IP 66 (better than NEMA 4X), Display unit IP65 (NEMA 4X),
DAMPING	1 - 99 sec.
CALIBRATION	Memory for 10 samples (FIFO). Built-in calibrator.
BUILD IN CURVES	Seven (7) built-in calibration lines for Softwood, Hardwood, TMP, CTMP, Groundwood, Recycled, Eucalyptus + one (1) user specific.
BINARY INPUTS	Three (3) to select calibration line and one (1) for sample button.

Waste Electronics and Electrical Equipment (WEEE)

This product is labelled with this symbol in accordance with European Directive 2012/19/EU, to indicate that it must not be disposed with your other household waste. Disposing of this product correctly will help save valuable resources and prevent any potential negative effects on human health and the environment, which could otherwise arise from inappropriate waste handling.

In the European Union

Please contact your local ABB representative who will inform you about the take-back of the product. Small products (and small amounts) might be taken back by your local collection facilities.

In countries outside the European Union

Please contact your local authorities and ask for the correct method of disposal.

ABB Oy, KPM
Kettukalliontie 9 E, 87100 Kajaani, Finland
+358 10 548 7600
www.prokajaani.com
fi-kpm@abb.com

—
ABB Oy, KPM
Kettukalliontie 9 E, 87100 Kajaani, Finland
+358 10 548 7600
www.prokajaani.com
fi-kpm@abb.com